6–17 A 600-MW steam power plant, which is cooled by a nearby river, has a thermal efficiency of 40 percent. Determine the rate of heat transfer to the river water. Will the actual heat transfer rate be higher or lower than this value? Why?

6-17 The power output and thermal efficiency of a power plant are given. The rate of heat rejection is to be determined, and the result is to be compared to the actual case in practice.

Assumptions **1** The plant operates steadily. **2** Heat losses from the working fluid at the pipes and other components are negligible.

Analysis The rate of heat supply to the power plant is determined from the thermal efficiency relation,

$$\dot{Q}_H = \frac{\dot{W}_{\text{net,out}}}{\eta_{\text{th}}} = \frac{600 \text{ MW}}{0.4} = 1500 \text{ MW}$$

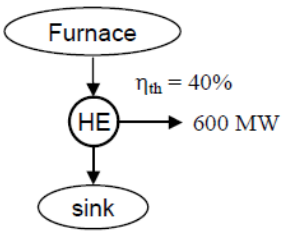

The rate of heat transfer to the river water is determined from the first law relation for a heat engine,

$$\dot{Q}_L = \dot{Q}_H - \dot{W}_{\text{net,out}} = 1500 - 600 = \mathbf{900\ \ MW}$$

In reality the amount of heat rejected to the river will be **lower** since part of the heat will be lost to the surrounding air from the working fluid as it passes through the pipes and other components.

6–18 A steam power plant receives heat from a furnace at a rate of 280 GJ/h. Heat losses to the surrounding air from the steam as it passes through the pipes and other components are estimated to be about 8 GJ/h. If the waste heat is transferred to the cooling water at a rate of 145 GJ/h, determine (*a*) net power output and (*b*) the thermal efficiency of this power plant. *Answers:* (*a*) 35.3 MW, (*b*) 45.4 percent

6-18 The rates of heat supply and heat rejection of a power plant are given. The power output and the thermal efficiency of this power plant are to be determined.

Assumptions **1** The plant operates steadily. **2** Heat losses from the working fluid at the pipes and other components are taken into consideration.

Analysis (*a*) The total heat rejected by this power plant is

$$\dot{Q}_L = 145 + 8 = 153 \text{ GJ/h}$$

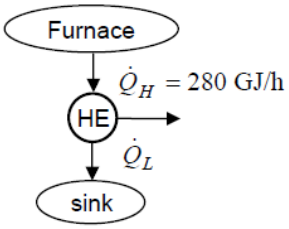

Then the net power output of the plant becomes

$$\dot{W}_{\text{net,out}} = \dot{Q}_H - \dot{Q}_L = 280 - 153 = 127 \text{ GJ/h} = \mathbf{35.3\ MW}$$

(*b*) The thermal efficiency of the plant is determined from its definition,

$$\eta_{\text{th}} = \frac{\dot{W}_{\text{net,out}}}{\dot{Q}_H} = \frac{127 \text{ GJ/h}}{280 \text{ GJ/h}} = 0.454 = \mathbf{45.4\%}$$

6–21 An automobile engine consumes fuel at a rate of 28 L/h and delivers 60 kW of power to the wheels. If the fuel has a heating value of 44,000 kJ/kg and a density of 0.8 g/cm^3, determine the efficiency of this engine. *Answer:* 21.9 percent

6-21 The power output and fuel consumption rate of a car engine are given. The thermal efficiency of the engine is to be determined.

Assumptions The car operates steadily.

Properties The heating value of the fuel is given to be 44,000 kJ/kg.

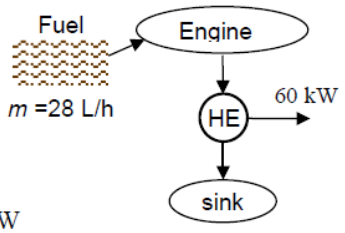

Analysis The mass consumption rate of the fuel is

$$\dot{m}_{\text{fuel}} = (\rho\dot{V})_{\text{fuel}} = (0.8\ \text{kg/L})(28\ \text{L/h}) = 22.4\ \text{kg/h}$$

The rate of heat supply to the car is

$$\dot{Q}_H = \dot{m}_{\text{coal}}u_{\text{coal}} = (22.4\ \text{kg/h})(44{,}000\ \text{kJ/kg}) = 985{,}600\ \text{kJ/h} = 273.78\ \text{kW}$$

Then the thermal efficiency of the car becomes

$$\eta_{\text{th}} = \frac{\dot{W}_{\text{net,out}}}{\dot{Q}_H} = \frac{60\ \text{kW}}{273.78\ \text{kW}} = 0.219 = \mathbf{21.9\%}$$

6–28 A coal-burning steam power plant produces a net power of 300 MW with an overall thermal efficiency of 32 percent. The actual gravimetric air–fuel ratio in the furnace is calculated to be 12 kg air/kg fuel. The heating value of the coal is 28,000 kJ/kg. Determine (*a*) the amount of coal consumed during a 24-hour period and (*b*) the rate of air flowing through the furnace. *Answers:* (*a*) 2.89 × 10^6 kg, (*b*) 402 kg/s

6-28 A coal-burning power plant produces 300 MW of power. The amount of coal consumed during a one-day period and the rate of air flowing through the furnace are to be determined.

Assumptions **1** The power plant operates steadily. **2** The kinetic and potential energy changes are zero.

Properties The heating value of the coal is given to be 28,000 kJ/kg.

Analysis (*a*) The rate and the amount of heat inputs to the power plant are

$$\dot{Q}_{\text{in}} = \frac{\dot{W}_{\text{net,out}}}{\eta_{\text{th}}} = \frac{300\ \text{MW}}{0.32} = 937.5\ \text{MW}$$

$$Q_{\text{in}} = \dot{Q}_{\text{in}}\Delta t = (937.5\ \text{MJ/s})(24 \times 3600\ \text{s}) = 8.1 \times 10^7\ \text{MJ}$$

The amount and rate of coal consumed during this period are

$$m_{\text{coal}} = \frac{Q_{\text{in}}}{q_{\text{HV}}} = \frac{8.1 \times 10^7\ \text{MW}}{28\ \text{MJ/kg}} = \mathbf{2.893 \times 10^6\ kg}$$

$$\dot{m}_{\text{coal}} = \frac{m_{\text{coal}}}{\Delta t} = \frac{2.893 \times 10^6\ \text{kg}}{24 \times 3600\ \text{s}} = 33.48\ \text{kg/s}$$

(*b*) Noting that the air-fuel ratio is 12, the rate of air flowing through the furnace is

$$\dot{m}_{\text{air}} = (\text{AF})\dot{m}_{\text{coal}} = (12\ \text{kg air/kg fuel})(33.48\ \text{kg/s}) = \mathbf{401.8\ kg/s}$$

6–39 A household refrigerator with a COP of 1.2 removes heat from the refrigerated space at a rate of 60 kJ/min. Determine (*a*) the electric power consumed by the refrigerator and (*b*) the rate of heat transfer to the kitchen air. *Answers:* (*a*) 0.83 kW, (*b*) 110 kJ/min

6-39 The COP and the refrigeration rate of a refrigerator are given. The power consumption and the rate of heat rejection are to be determined.

Assumptions The refrigerator operates steadily.

Analysis (*a*) Using the definition of the coefficient of performance, the power input to the refrigerator is determined to be

$$\dot{W}_{\text{net,in}} = \frac{\dot{Q}_L}{\text{COP}_\text{R}} = \frac{60\ \text{kJ/min}}{1.2} = 50\ \text{kJ/min} = \mathbf{0.83\ kW}$$

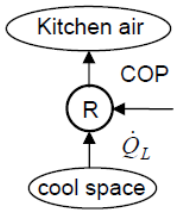

(*b*) The heat transfer rate to the kitchen air is determined from the energy balance,

$$\dot{Q}_H = \dot{Q}_L + \dot{W}_{\text{net,in}} = 60 + 50 = \mathbf{110\ kJ/min}$$

6–40 An air conditioner removes heat steadily from a house at a rate of 750 kJ/min while drawing electric power at a rate of 6 kW. Determine (*a*) the COP of this air conditioner and (*b*) the rate of heat transfer to the outside air. *Answers:* (*a*) 2.08, (*b*) 1110 kJ/min

6-40 The power consumption and the cooling rate of an air conditioner are given. The COP and the rate of heat rejection are to be determined.

Assumptions The air conditioner operates steadily.

Analysis (*a*) The coefficient of performance of the air-conditioner (or refrigerator) is determined from its definition,

$$\text{COP}_\text{R} = \frac{\dot{Q}_L}{\dot{W}_{\text{net,in}}} = \frac{750\ \text{kJ/min}}{6\ \text{kW}}\left(\frac{1\ \text{kW}}{60\ \text{kJ/min}}\right) = \mathbf{2.08}$$

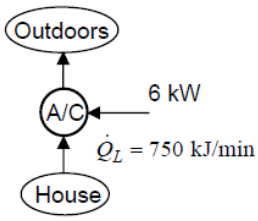

(*b*) The rate of heat discharge to the outside air is determined from the energy balance,

$$\dot{Q}_H = \dot{Q}_L + \dot{W}_{\text{net,in}} = (750\ \text{kJ/min}) + (6 \times 60\ \text{kJ/min}) = \mathbf{1110\ \ kJ/min}$$

6–41 A household refrigerator runs one-fourth of the time and removes heat from the food compartment at an average rate of 800 kJ/h. If the COP of the refrigerator is 2.2, determine the power the refrigerator draws when running.

6-41 The COP and the refrigeration rate of a refrigerator are given. The power consumption of the refrigerator is to be determined.

Assumptions The refrigerator operates steadily.

Analysis Since the refrigerator runs one-fourth of the time and removes heat from the food compartment at an average rate of 800 kJ/h, the refrigerator removes heat at a rate of

$$\dot{Q}_L = 4 \times (800\ \text{kJ/h}) = 3200\ \text{kJ/h}$$

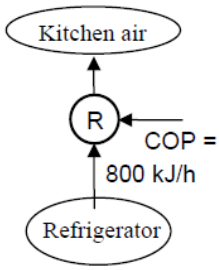

when running. Thus the power the refrigerator draws when it is running is

$$\dot{W}_{\text{net,in}} = \frac{\dot{Q}_L}{\text{COP}_\text{R}} = \frac{3200\ \text{kJ/h}}{2.2} = 1455\ \text{kJ/h} = \mathbf{0.40\ \ kW}$$

6–43 A household refrigerator that has a power input of 450 W and a COP of 2.5 is to cool five large watermelons, 10 kg each, to 8°C. If the watermelons are initially at 20°C, determine how long it will take for the refrigerator to cool them. The watermelons can be treated as water whose specific heat is 4.2 kJ/kg · °C. Is your answer realistic or optimistic? Explain. *Answer:* 2240 s

6-43 The COP and the power consumption of a refrigerator are given. The time it will take to cool 5 watermelons is to be determined.

Assumptions **1** The refrigerator operates steadily. **2** The heat gain of the refrigerator through its walls, door, etc. is negligible. **3** The watermelons are the only items in the refrigerator to be cooled.

Properties The specific heat of watermelons is given to be $c = 4.2$ kJ/kg.°C.

Analysis The total amount of heat that needs to be removed from the watermelons is

$$Q_L = (mc\Delta T)_{\text{watermelons}} = 5 \times (10\text{ kg})(4.2\text{ kJ/kg}\cdot{}^\circ\text{C})(20-8)^\circ\text{C} = 2520\text{ kJ}$$

The rate at which this refrigerator removes heat is

$$\dot{Q}_L = (\text{COP}_\text{R})(\dot{W}_{\text{net,in}}) = (2.5)(0.45\text{ kW}) = 1.125\text{ kW}$$

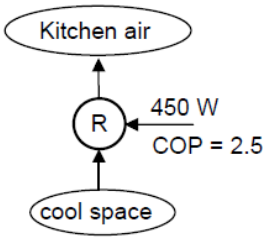

That is, this refrigerator can remove 1.125 kJ of heat per second. Thus the time required to remove 2520 kJ of heat is

$$\Delta t = \frac{Q_L}{\dot{Q}_L} = \frac{2520\text{ kJ}}{1.125\text{ kJ/s}} = 2240\text{ s} = \mathbf{37.3\ min}$$

6–44 When a man returns to his well-sealed house on a summer day, he finds that the house is at 32°C. He turns on the air conditioner, which cools the entire house to 20°C in 15 min. If the COP of the air-conditioning system is 2.5, determine the power drawn by the air conditioner. Assume the entire mass within the house is equivalent to 800 kg of air for which $c_v = 0.72$ kJ/kg · °C and $c_p = 1.0$ kJ/kg · °C.

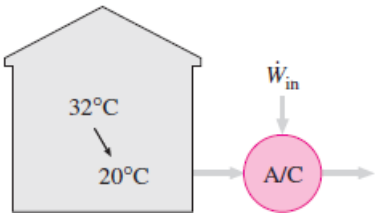

6-44 [*Also solved by EES on enclosed CD*] An air conditioner with a known COP cools a house to desired temperature in 15 min. The power consumption of the air conditioner is to be determined.

Assumptions **1** The air conditioner operates steadily. **2** The house is well-sealed so that no air leaks in or out during cooling. **3** Air is an ideal gas with constant specific heats at room temperature.

Properties The constant volume specific heat of air is given to be $c_v = 0.72$ kJ/kg.°C.

Analysis Since the house is well-sealed (constant volume), the total amount of heat that needs to be removed from the house is

$$Q_L = (mc_v \Delta T)_{\text{House}} = (800\text{ kg})(0.72\text{ kJ/kg}\cdot°\text{C})(32-20)°\text{C} = 6912\text{ kJ}$$

This heat is removed in 15 minutes. Thus the average rate of heat removal from the house is

$$\dot{Q}_L = \frac{Q_L}{\Delta t} = \frac{6912\text{ kJ}}{15\times 60\text{ s}} = 7.68\text{ kW}$$

Using the definition of the coefficient of performance, the power input to the air-conditioner is determined to be

$$\dot{W}_{\text{net,in}} = \frac{\dot{Q}_L}{\text{COP}_R} = \frac{7.68\text{ kW}}{2.5} = \mathbf{3.07\ kW}$$

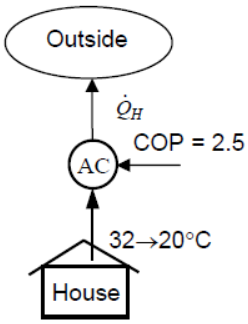

6–47 Determine the COP of a heat pump that supplies energy to a house at a rate of 8000 kJ/h for each kW of electric power it draws. Also, determine the rate of energy absorption from the outdoor air. *Answers:* 2.22, 4400 kJ/h

6-47 The rate of heat supply of a heat pump per kW of power it consumes is given. The COP and the rate of heat absorption from the cold environment are to be determined.

Assumptions The heat pump operates steadily.

Analysis The coefficient of performance of the refrigerator is determined from its definition,

$$\text{COP}_{\text{HP}} = \frac{\dot{Q}_H}{\dot{W}_{\text{net,in}}} = \frac{8000\text{ kJ/h}}{1\text{ kW}}\left(\frac{1\text{ kW}}{3600\text{ kJ/h}}\right) = \mathbf{2.22}$$

The rate of heat absorption from the surrounding air, per kW of power consumed, is determined from the energy balance,

$$\dot{Q}_L = \dot{Q}_H - \dot{W}_{\text{net,in}} = (8{,}000\text{ kJ/h}) - (1)(3600\text{ kJ/h}) = \mathbf{4400\ kJ/h}$$

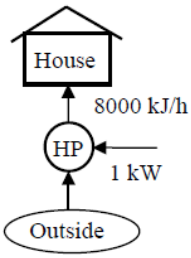

6–50 A heat pump used to heat a house runs about one-third of the time. The house is losing heat at an average rate of 22,000 kJ/h. If the COP of the heat pump is 2.8, determine the power the heat pump draws when running.

6-50 The rate of heat loss from a house and the COP of the heat pump are given. The power consumption of the heat pump when it is running is to be determined.

Assumptions The heat pump operates one-third of the time.

Analysis Since the heat pump runs one-third of the time and must supply heat to the house at an average rate of 22,000 kJ/h, the heat pump supplies heat at a rate of

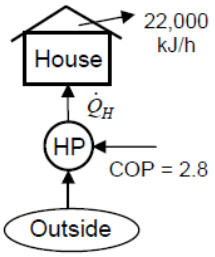

$$\dot{Q}_H = 3 \times (22{,}000 \text{ kJ/h}) = 66{,}000 \text{ kJ/h}$$

when running. Thus the power the heat pump draws when it is running is

$$\dot{W}_{\text{net,in}} = \frac{\dot{Q}_H}{\text{COP}_{\text{HP}}} = \frac{66{,}000 \text{ kJ/h}}{2.8}\left(\frac{1 \text{ kW}}{3600 \text{ kJ/h}}\right) = \mathbf{6.55\ kW}$$

6–54 Refrigerant-134a enters the condenser of a residential heat pump at 800 kPa and 35°C at a rate of 0.018 kg/s and leaves at 800 kPa as a saturated liquid. If the compressor consumes 1.2 kW of power, determine (*a*) the COP of the heat pump and (*b*) the rate of heat absorption from the outside air.

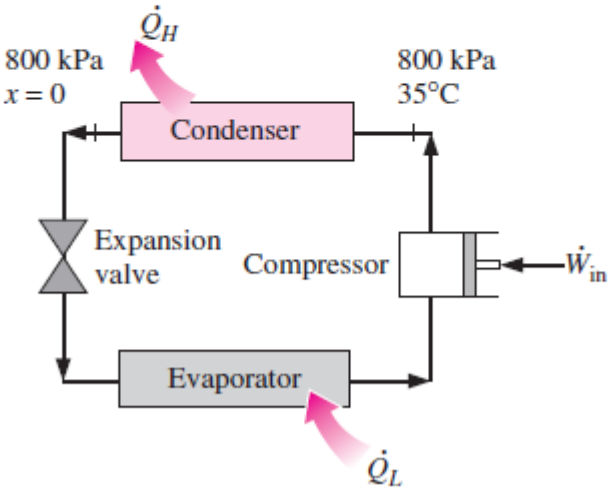

6-54 Refrigerant-134a flows through the condenser of a residential heat pump unit. For a given compressor power consumption the COP of the heat pump and the rate of heat absorbed from the outside air are to be determined.

Assumptions **1** The heat pump operates steadily. **2** The kinetic and potential energy changes are zero.

Properties The enthalpies of R-134a at the condenser inlet and exit are

$$\left.\begin{array}{l} P_1 = 800\text{ kPa} \\ T_1 = 35°\text{C} \end{array}\right\} h_1 = 271.22\text{ kJ/kg}$$

$$\left.\begin{array}{l} P_2 = 800\text{ kPa} \\ x_2 = 0 \end{array}\right\} h_2 = 95.47\text{ kJ/kg}$$

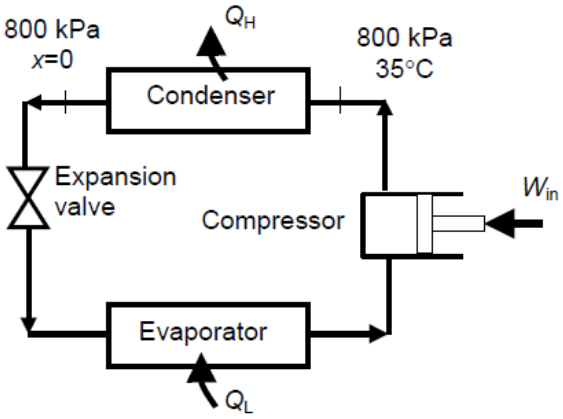

Analysis (*a*) An energy balance on the condenser gives the heat rejected in the condenser

$$\dot{Q}_H = \dot{m}(h_1 - h_2) = (0.018\text{ kg/s})(271.22 - 95.47)\text{ kJ/kg} = 3.164\text{ kW}$$

The COP of the heat pump is

$$\text{COP} = \frac{\dot{Q}_H}{\dot{W}_{in}} = \frac{3.164\text{ kW}}{1.2\text{ kW}} = \mathbf{2.64}$$

(*b*) The rate of heat absorbed from the outside air

$$\dot{Q}_L = \dot{Q}_H - \dot{W}_{in} = 3.164 - 1.2 = \mathbf{1.96\text{ kW}}$$

6–55 Refrigerant-134a enters the evaporator coils placed at the back of the freezer section of a household refrigerator at 120 kPa with a quality of 20 percent and leaves at 120 kPa and −20°C. If the compressor consumes 450 W of power and the COP the refrigerator is 1.2, determine (*a*) the mass flow rate of the refrigerant and (*b*) the rate of heat rejected to the kitchen air. *Answers:* (*a*) 0.00311 kg/s, (*b*) 990 W

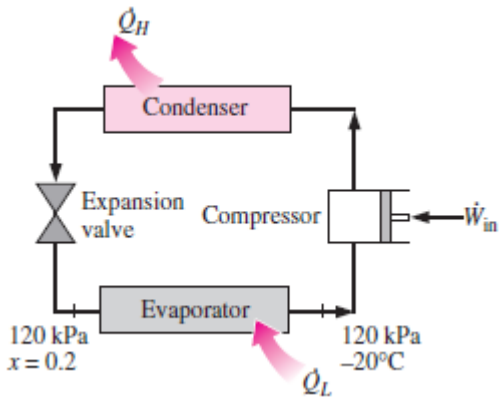

6-55 A commercial refrigerator with R-134a as the working fluid is considered. The evaporator inlet and exit states are specified. The mass flow rate of the refrigerant and the rate of heat rejected are to be determined.

Assumptions **1** The refrigerator operates steadily. **2** The kinetic and potential energy changes are zero.

Properties The properties of R-134a at the evaporator inlet and exit states are (Tables A-11 through A-13)

$$\left.\begin{array}{l} P_1 = 120\text{ kPa} \\ x_1 = 0.2 \end{array}\right\} h_1 = 65.38\text{ kJ/kg}$$

$$\left.\begin{array}{l} P_2 = 120\text{ kPa} \\ T_2 = -20°\text{C} \end{array}\right\} h_2 = 238.84\text{ kJ/kg}$$

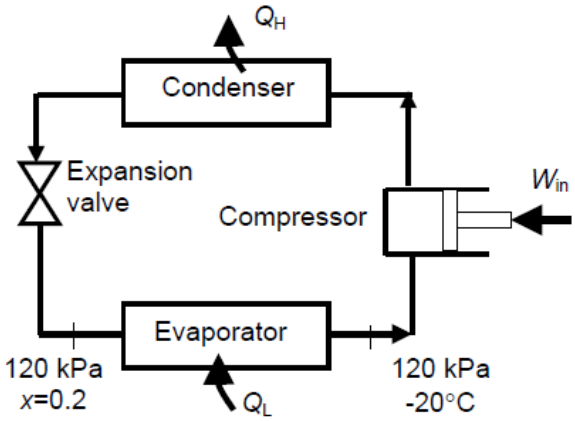

Analysis (*a*) The refrigeration load is

$$\dot{Q}_L = (\text{COP})\dot{W}_{\text{in}} = (1.2)(0.45\text{ kW}) = 0.54\text{ kW}$$

The mass flow rate of the refrigerant is determined from

$$\dot{m}_R = \frac{\dot{Q}_L}{h_2 - h_1} = \frac{0.54\text{ kW}}{(238.84 - 65.38)\text{ kJ/kg}} = \mathbf{0.0031\ kg/s}$$

(*b*) The rate of heat rejected from the refrigerator is

$$\dot{Q}_H = \dot{Q}_L + \dot{W}_{\text{in}} = 0.54 + 0.45 = \mathbf{0.99\ kW}$$

CARNOT HEAT ENGINE

6–71 A Carnot heat engine operates between a source at 1000 K and a sink at 300 K. If the heat engine is supplied with heat at a rate of 800 kJ/min, determine (*a*) the thermal efficiency and (*b*) the power output of this heat engine. *Answers:* (*a*) 70 percent, (*b*) 9.33 kW

6-71 The source and sink temperatures of a Carnot heat engine and the rate of heat supply are given. The thermal efficiency and the power output are to be determined.

Assumptions The Carnot heat engine operates steadily.

Analysis (a) The thermal efficiency of a Carnot heat engine depends on the source and the sink temperatures only, and is determined from

$$\eta_{\text{th,C}} = 1 - \frac{T_L}{T_H} = 1 - \frac{300\text{ K}}{1000\text{ K}} = 0.70 \text{ or } \mathbf{70\%}$$

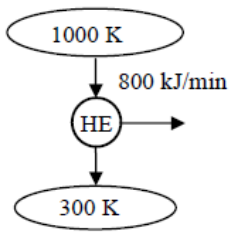

(b) The power output of this heat engine is determined from the definition of thermal efficiency,

$$\dot{W}_{\text{net,out}} = \eta_{\text{th}}\dot{Q}_H = (0.70)(800\text{ kJ/min}) = 560\text{ kJ/min} = \mathbf{9.33\ kW}$$

6–72 A Carnot heat engine receives 650 kJ of heat from a source of unknown temperature and rejects 250 kJ of it to a sink at 24°C. Determine (*a*) the temperature of the source and (*b*) the thermal efficiency of the heat engine.

6-72 The sink temperature of a Carnot heat engine and the rates of heat supply and heat rejection are given. The source temperature and the thermal efficiency of the engine are to be determined.

Assumptions The Carnot heat engine operates steadily.

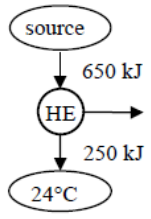

Analysis (a) For reversible cyclic devices we have $\left(\frac{Q_H}{Q_L}\right)_{\text{rev}} = \left(\frac{T_H}{T_L}\right)$

Thus the temperature of the source T_H must be

$$T_H = \left(\frac{Q_H}{Q_L}\right)_{\text{rev}} T_L = \left(\frac{650\text{ kJ}}{250\text{ kJ}}\right)(297\text{ K}) = \mathbf{772.2\ K}$$

(*b*) The thermal efficiency of a Carnot heat engine depends on the source and the sink temperatures only, and is determined from

$$\eta_{\text{th,C}} = 1 - \frac{T_L}{T_H} = 1 - \frac{297\text{ K}}{772.2\text{ K}} = 0.615 \text{ or } \mathbf{61.5\%}$$

6–73 A heat engine operates between a source at 550°C and a sink at 25°C. If heat is supplied to the heat engine at a steady rate of 1200 kJ/min, determine the maximum power output of this heat engine.

6-73 [*Also solved by EES on enclosed CD*] The source and sink temperatures of a heat engine and the rate of heat supply are given. The maximum possible power output of this engine is to be determined.

Assumptions The heat engine operates steadily.

Analysis The highest thermal efficiency a heat engine operating between two specified temperature limits can have is the Carnot efficiency, which is determined from

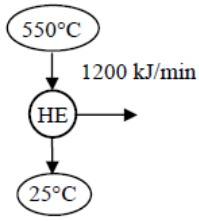

$$\eta_{\text{th,max}} = \eta_{\text{th,C}} = 1 - \frac{T_L}{T_H} = 1 - \frac{298\text{ K}}{823\text{ K}} = 0.638 \text{ or } 63.8\%$$

Then the maximum power output of this heat engine is determined from the definition of thermal efficiency to be

$$\dot{W}_{\text{net,out}} = \eta_{\text{th}}\dot{Q}_H = (0.638)(1200\text{ kJ/min}) = 765.6\text{ kJ/min} = \mathbf{12.8\ kW}$$

6–77 An innovative way of power generation involves the utilization of geothermal energy—the energy of hot water that exists naturally underground—as the heat source. If a supply of hot water at 140°C is discovered at a location where the environmental temperature is 20°C, determine the maximum thermal efficiency a geothermal power plant built at that location can have. *Answer:* 29.1 percent

6-77 The source and sink temperatures of a geothermal power plant are given. The maximum thermal efficiency is to be determined.

Assumptions The power plant operates steadily.

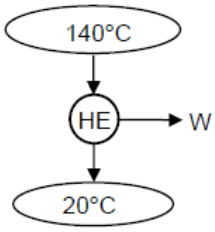

Analysis The highest thermal efficiency a heat engine operating between two specified temperature limits can have is the Carnot efficiency, which is determined from

$$\eta_{\text{th,max}} = \eta_{\text{th,C}} = 1 - \frac{T_L}{T_H} = 1 - \frac{20 + 273\text{ K}}{140 + 273\text{ K}} = 0.291 \text{ or } \mathbf{29.1\%}$$

6–78 An inventor claims to have developed a heat engine that receives 700 kJ of heat from a source at 500 K and produces 300 kJ of net work while rejecting the waste heat to a sink at 290 K. Is this a reasonable claim? Why?

6-78 An inventor claims to have developed a heat engine. The inventor reports temperature, heat transfer, and work output measurements. The claim is to be evaluated.

Analysis The highest thermal efficiency a heat engine operating between two specified temperature limits can have is the Carnot efficiency, which is determined from

$$\eta_{\text{th,max}} = \eta_{\text{th,C}} = 1 - \frac{T_L}{T_H} = 1 - \frac{290\text{ K}}{500\text{ K}} = 0.42 \text{ or } \mathbf{42\%}$$

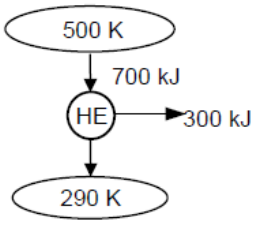

The actual thermal efficiency of the heat engine in question is

$$\eta_{\text{th}} = \frac{W_{net}}{Q_H} = \frac{300\text{ kJ}}{700\text{ kJ}} = 0.429 \text{ or } \mathbf{42.9\%}$$

which is greater than the maximum possible thermal efficiency. Therefore, this heat engine is a PMM2 and the claim is **false**.

6–80 A geothermal power plant uses geothermal water extracted at 160°C at a rate of 440 kg/s as the heat source and produces 22 MW of net power. If the environment temperature is 25°C, determine (*a*) the actual thermal efficiency, (*b*) the maximum possible thermal efficiency, and (*c*) the actual rate of heat rejection from this power plant.

6-80 A geothermal power plant uses geothermal liquid water at 160°C at a specified rate as the heat source. The actual and maximum possible thermal efficiencies and the rate of heat rejected from this power plant are to be determined.

Assumptions **1** The power plant operates steadily. **2** The kinetic and potential energy changes are zero. **3** Steam properties are used for geothermal water.

Properties Using saturated liquid properties, the source and the sink state enthalpies of geothermal water are (Table A-4)

$$\left.\begin{array}{l} T_{\text{source}} = 160°\text{C} \\ x_{\text{source}} = 0 \end{array}\right\} h_{\text{source}} = 675.47 \text{ kJ/kg}$$

$$\left.\begin{array}{l} T_{\text{sink}} = 25°\text{C} \\ x_{\text{sink}} = 0 \end{array}\right\} h_{\text{sink}} = 104.83 \text{ kJ/kg}$$

Analysis (*a*) The rate of heat input to the plant may be taken as the enthalpy difference between the source and the sink for the power plant

$$\dot{Q}_{\text{in}} = \dot{m}_{\text{geo}}(h_{\text{source}} - h_{\text{sink}}) = (440 \text{ kg/s})(675.47 - 104.83) \text{ kJ/kg} = 251{,}083 \text{ kW}$$

The actual thermal efficiency is

$$\eta_{\text{th}} = \frac{\dot{W}_{\text{net,out}}}{\dot{Q}_{\text{in}}} = \frac{22 \text{ MW}}{251.083 \text{ MW}} = \mathbf{0.0876 = 8.8\%}$$

(*b*) The maximum thermal efficiency is the thermal efficiency of a reversible heat engine operating between the source and sink temperatures

$$\eta_{\text{th,max}} = 1 - \frac{T_L}{T_H} = 1 - \frac{(25+273)\text{ K}}{(160+273)\text{ K}} = \mathbf{0.312 = 31.2\%}$$

(*c*) Finally, the rate of heat rejection is

$$\dot{Q}_{\text{out}} = \dot{Q}_{\text{in}} - \dot{W}_{\text{net,out}} = 251.1 - 22 = \mathbf{229.1\,MW}$$

6–86 A Carnot refrigerator operates in a room in which the temperature is 22°C and consumes 2 kW of power when operating. If the food compartment of the refrigerator is to be maintained at 3°C, determine the rate of heat removal from the food compartment.

6-86 The refrigerated space and the environment temperatures of a Carnot refrigerator and the power consumption are given. The rate of heat removal from the refrigerated space is to be determined.

Assumptions The Carnot refrigerator operates steadily.

Analysis The coefficient of performance of a Carnot refrigerator depends on the temperature limits in the cycle only, and is determined from

$$\text{COP}_{\text{R,C}} = \frac{1}{(T_H/T_L)-1} = \frac{1}{(22+273\text{K})/(3+273\text{K})-1} = 14.5$$

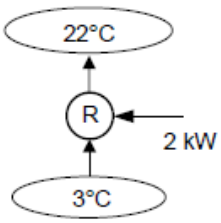

The rate of heat removal from the refrigerated space is determined from the definition of the coefficient of performance of a refrigerator,

$$\dot{Q}_L = \text{COP}_{\text{R}}\dot{W}_{\text{net,in}} = (14.5)(2 \text{ kW}) = 29.0 \text{ kW} = \mathbf{1740\ \ kJ/min}$$

6–87 A refrigerator is to remove heat from the cooled space at a rate of 300 kJ/min to maintain its temperature at −8°C.

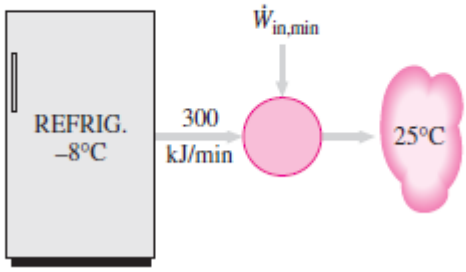

If the air surrounding the refrigerator is at 25°C, determi the minimum power input required for this refrigerat
Answer: 0.623 kW

6-87 The refrigerated space and the environment temperatures for a refrigerator and the rate of heat removal from the refrigerated space are given. The minimum power input required is to be determined.

Assumptions The refrigerator operates steadily.

Analysis The power input to a refrigerator will be a minimum when the refrigerator operates in a reversible manner. The coefficient of performance of a reversible refrigerator depends on the temperature limits in the cycle only, and is determined from

$$COP_{R,rev} = \frac{1}{(T_H/T_L)-1} = \frac{1}{(25+273\text{ K})/(-8+273\text{ K})-1} = 8.03$$

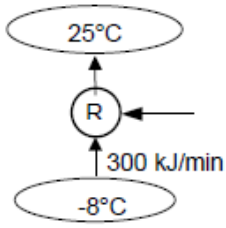

The power input to this refrigerator is determined from the definition of the coefficient of performance of a refrigerator,

$$\dot{W}_{net,in,min} = \frac{\dot{Q}_L}{COP_{R,max}} = \frac{300\text{ kJ/min}}{8.03} = 37.36\text{ kJ/min} = \mathbf{0.623\ kW}$$

6–88 An air-conditioning system operating on the reversed Carnot cycle is required to transfer heat from a house at a rate of 750 kJ/min to maintain its temperature at 24°C. If the outdoor air temperature is 35°C, determine the power required to operate this air-conditioning system. *Answer:* 0.46 kW

6-88 The cooled space and the outdoors temperatures for a Carnot air-conditioner and the rate of heat removal from the air-conditioned room are given. The power input required is to be determined.

Assumptions The air-conditioner operates steadily.

Analysis The COP of a Carnot air conditioner (or Carnot refrigerator) depends on the temperature limits in the cycle only, and is determined from

$$COP_{R,C} = \frac{1}{(T_H/T_L)-1} = \frac{1}{(35+273\text{ K})/(24+273\text{ K})-1} = 27.0$$

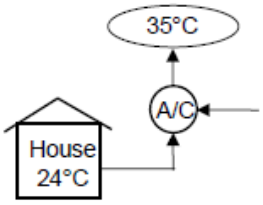

The power input to this refrigerator is determined from the definition of the coefficient of performance of a refrigerator,

$$\dot{W}_{net,in} = \frac{\dot{Q}_L}{COP_{R,max}} = \frac{750\text{ kJ/min}}{27.0} = 27.8\text{ kJ/min} = \mathbf{0.463\ kW}$$

6–90 A Carnot refrigerator operates in a room in which the temperature is 25°C. The refrigerator consumes 500 W of power when operating and has a COP of 4.5. Determine (*a*) the rate of heat removal from the refrigerated space and (*b*) the temperature of the refrigerated space. *Answers:* (*a*) 135 kJ/min, (*b*) −29.2°C

6-90 The refrigerated space temperature, the COP, and the power input of a Carnot refrigerator are given. The rate of heat removal from the refrigerated space and its temperature are to be determined.

Assumptions The refrigerator operates steadily.

Analysis (*a*) The rate of heat removal from the refrigerated space is determined from the definition of the COP of a refrigerator,

$$\dot{Q}_L = \mathrm{COP}_R \dot{W}_{\mathrm{net,in}} = (4.5)(0.5\ \mathrm{kW}) = 2.25\ \mathrm{kW} = \mathbf{135\ kJ/min}$$

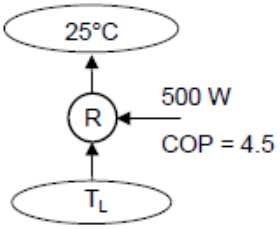

(*b*) The temperature of the refrigerated space T_L is determined from the coefficient of performance relation for a Carnot refrigerator,

$$\mathrm{COP}_{R,\mathrm{rev}} = \frac{1}{(T_H/T_L)-1} \longrightarrow 4.5 = \frac{1}{(25+273\ \mathrm{K})/T_L - 1}$$

It yields

$$T_L = 243.8\ \mathrm{K} = \mathbf{-29.2°C}$$

6–91 An inventor claims to have developed a refrigeration system that removes heat from the closed region at −12°C and transfers it to the surrounding air at 25°C while maintaining a COP of 6.5. Is this claim reasonable? Why?

6-91 An inventor claims to have developed a refrigerator. The inventor reports temperature and COP measurements. The claim is to be evaluated.

Analysis The highest coefficient of performance a refrigerator can have when removing heat from a cool medium at -12°C to a warmer medium at 25°C is

$$\mathrm{COP}_{R,\max} = \mathrm{COP}_{R,\mathrm{rev}} = \frac{1}{(T_H/T_L)-1} = \frac{1}{(25+273\ \mathrm{K})/(-12+273\ \mathrm{K})-1} = 7.1$$

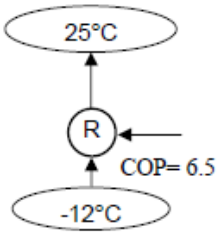

The COP claimed by the inventor is 6.5, which is below this maximum value, thus the claim is **reasonable**. However, it is not probable.

6–92 During an experiment conducted in a room at 25°C, a laboratory assistant measures that a refrigerator that draws 2 kW of power has removed 30,000 kJ of heat from the refrigerated space, which is maintained at −30°C. The running time of the refrigerator during the experiment was 20 min. Determine if these measurements are reasonable.

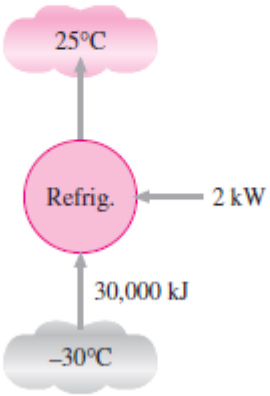

FIGURE P6–92

6-92 An experimentalist claims to have developed a refrigerator. The experimentalist reports temperature, heat transfer, and work input measurements. The claim is to be evaluated.

Analysis The highest coefficient of performance a refrigerator can have when removing heat from a cool medium at -30°C to a warmer medium at 25°C is

$$\mathrm{COP}_{\mathrm{R,max}} = \mathrm{COP}_{\mathrm{R,rev}} = \frac{1}{(T_H/T_L)-1} = \frac{1}{(25+273\ \mathrm{K})/(-30+273\ \mathrm{K})-1} = 4.42$$

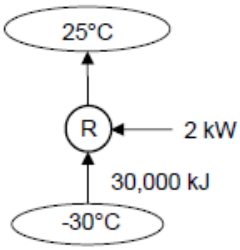

The work consumed by the actual refrigerator during this experiment is

$$W_{\mathrm{net,in}} = \dot{W}_{\mathrm{net,in}}\Delta t = (2\ \mathrm{kJ/s})(20\times 60\ \mathrm{s}) = 2400\ \mathrm{kJ}$$

Then the coefficient of performance of this refrigerator becomes

$$\mathrm{COP}_{\mathrm{R}} = \frac{Q_L}{W_{\mathrm{net,in}}} = \frac{30{,}000\mathrm{kJ}}{2400\mathrm{kJ}} = 12.5$$

which is above the maximum value. Therefore, these measurements are **not reasonable**.

6–95 A heat pump is used to maintain a house at 22°C by extracting heat from the outside air on a day when the outside air temperature is 2°C. The house is estimated to lose heat at a rate of 110,000 kJ/h, and the heat pump consumes 5 kW of electric power when running. Is this heat pump powerful enough to do the job?

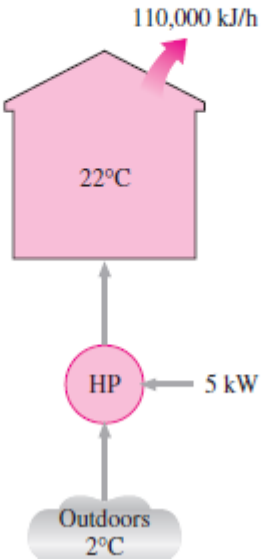

6-95 A heat pump maintains a house at a specified temperature. The rate of heat loss of the house and the power consumption of the heat pump are given. It is to be determined if this heat pump can do the job.

Assumptions The heat pump operates steadily.

Analysis The power input to a heat pump will be a minimum when the heat pump operates in a reversible manner. The coefficient of performance of a reversible heat pump depends on the temperature limits in the cycle only, and is determined from

$$\mathrm{COP}_{\mathrm{HP,rev}} = \frac{1}{1-(T_L/T_H)} = \frac{1}{1-(2+273\ \mathrm{K})/(22+273\ \mathrm{K})} = 14.75$$

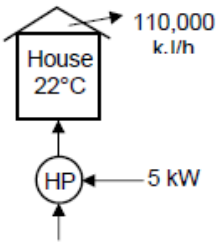

The required power input to this reversible heat pump is determined from the definition of the coefficient of performance to be

$$\dot{W}_{\mathrm{net,in,min}} = \frac{\dot{Q}_H}{\mathrm{COP}_{\mathrm{HP}}} = \frac{110{,}000\ \mathrm{kJ/h}}{14.75}\left(\frac{1\ \mathrm{h}}{3600\ \mathrm{s}}\right) = \mathbf{2.07\ kW}$$

This heat pump is **powerful enough** since 5 kW > 2.07 kW.

6–96 The structure of a house is such that it loses heat at a rate of 5400 kJ/h per °C difference between the indoors and outdoors. A heat pump that requires a power input of 6 kW is used to maintain this house at 21°C. Determine the lowest outdoor temperature for which the heat pump can meet the heating requirements of this house. *Answer:* −13.3°C

6-96 A heat pump that consumes 5-kW of power when operating maintains a house at a specified temperature. The house is losing heat in proportion to the temperature difference between the indoors and the outdoors. The lowest outdoor temperature for which this heat pump can do the job is to be determined.

Assumptions The heat pump operates steadily.

Analysis Denoting the outdoor temperature by T_L, the heating load of this house can be expressed as

$$\dot{Q}_H = (5400 \text{ kJ/h} \cdot \text{K})(294 - T_L) = (1.5 \text{ kW/K})(294 - T_L)\text{K}$$

The coefficient of performance of a Carnot heat pump depends on the temperature limits in the cycle only, and can be expressed as

$$\text{COP}_{\text{HP}} = \frac{1}{1-(T_L/T_H)} = \frac{1}{1-T_L/(294 \text{ K})}$$

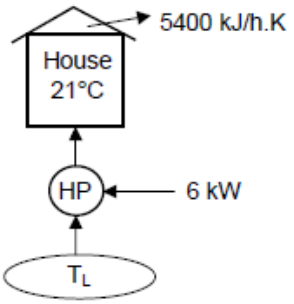

or, as

$$\text{COP}_{\text{HP}} = \frac{\dot{Q}_H}{\dot{W}_{\text{net,in}}} = \frac{(1.5 \text{ kW/K})(294 - T_L)\text{K}}{6 \text{ kW}}$$

Equating the two relations above and solving for T_L, we obtain

$$T_L = 259.7 \text{ K} = \mathbf{-13.3°C}$$

6–99 A Carnot heat pump is to be used to heat a house and maintain it at 20°C in winter. On a day when the average outdoor temperature remains at about 2°C, the house is estimated to lose heat at a rate of 82,000 kJ/h. If the heat pump consumes 8 kW of power while operating, determine (*a*) how long the heat pump ran on that day; (*b*) the total heating costs, assuming an average price of 8.5¢/kWh for electricity; and (*c*) the heating cost for the same day if resistance heating is used instead of a heat pump. *Answers:* (*a*) 4.19 h, (*b*) $2.85, (*c*) $46.47

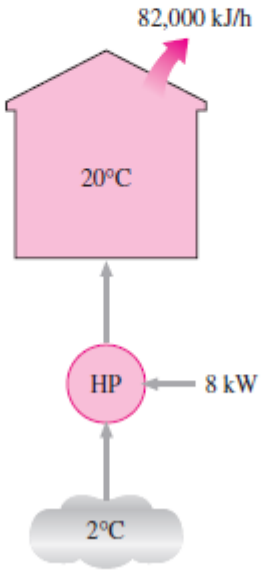

FIGURE P6–99

6-99 A Carnot heat pump consumes 8-kW of power when operating, and maintains a house at a specified temperature. The average rate of heat loss of the house in a particular day is given. The actual running time of the heat pump that day, the heating cost, and the cost if resistance heating is used instead are to be determined.

Analysis (*a*) The coefficient of performance of this Carnot heat pump depends on the temperature limits in the cycle only, and is determined from

$$\mathrm{COP}_{\mathrm{HP,rev}} = \frac{1}{1-(T_L/T_H)} = \frac{1}{1-(2+273\ \mathrm{K})/(20+273\ \mathrm{K})} = 16.3$$

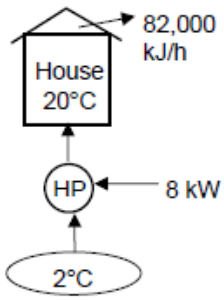

The amount of heat the house lost that day is

$$Q_H = \dot{Q}_H(1\ \mathrm{day}) = (82{,}000\ \mathrm{kJ/h})(24\ \mathrm{h}) = 1{,}968{,}000\ \mathrm{kJ}$$

Then the required work input to this Carnot heat pump is determined from the definition of the coefficient of performance to be

$$W_{\mathrm{net,in}} = \frac{Q_H}{\mathrm{COP}_{\mathrm{HP}}} = \frac{1{,}968{,}000\ \mathrm{kJ}}{16.3} = 120{,}736\ \mathrm{kJ}$$

Thus the length of time the heat pump ran that day is

$$\Delta t = \frac{W_{\mathrm{net,in}}}{\dot{W}_{\mathrm{net,in}}} = \frac{120{,}736\ \mathrm{kJ}}{8\ \mathrm{kJ/s}} = 15{,}092\ \mathrm{s} = \mathbf{4.19\ h}$$

(*b*) The total heating cost that day is

$$\mathrm{Cost} = W \times \mathrm{price} = (\dot{W}_{\mathrm{net,in}} \times \Delta t)(\mathrm{price}) = (8\ \mathrm{kW})(4.19\ \mathrm{h})(0.085\ \$/\mathrm{kWh}) = \mathbf{\$2.85}$$

(*c*) If resistance heating were used, the entire heating load for that day would have to be met by electrical energy. Therefore, the heating system would consume 1,968,000 kJ of electricity that would cost

$$\mathrm{New\ Cost} = Q_H \times \mathrm{price} = (1{,}968{,}000\mathrm{kJ})\left(\frac{1\ \mathrm{kWh}}{3600\ \mathrm{kJ}}\right)(0.085\ \$/\mathrm{kWh}) = \mathbf{\$46.47}$$

6–100 A Carnot heat engine receives heat from a reservoir at 900°C at a rate of 800 kJ/min and rejects the waste heat to the ambient air at 27°C. The entire work output of the heat engine is used to drive a refrigerator that removes heat from the refrigerated space at −5°C and transfers it to the same ambient air at 27°C. Determine (*a*) the maximum rate of heat removal from the refrigerated space and (*b*) the total rate of heat rejection to the ambient air. *Answers:* (*a*) 4982 kJ/min, (*b*) 5782 kJ

6-100 A Carnot heat engine is used to drive a Carnot refrigerator. The maximum rate of heat removal from the refrigerated space and the total rate of heat rejection to the ambient air are to be determined.

Assumptions The heat engine and the refrigerator operate steadily.

Analysis (a) The highest thermal efficiency a heat engine operating between two specified temperature limits can have is the Carnot efficiency, which is determined from

$$\eta_{\text{th,max}} = \eta_{\text{th,C}} = 1 - \frac{T_L}{T_H} = 1 - \frac{300\text{ K}}{1173\text{ K}} = 0.744$$

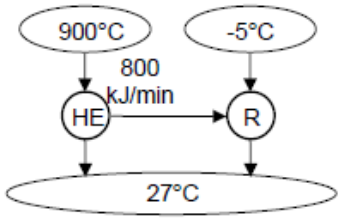

Then the maximum power output of this heat engine is determined from the definition of thermal efficiency to be

$$\dot{W}_{\text{net,out}} = \eta_{\text{th}}\dot{Q}_H = (0.744)(800\text{ kJ/min}) = 595.2\text{ kJ/min}$$

which is also the power input to the refrigerator, $\dot{W}_{\text{net,in}}$.

The rate of heat removal from the refrigerated space will be a maximum if a Carnot refrigerator is used. The COP of the Carnot refrigerator is

$$\text{COP}_{\text{R,rev}} = \frac{1}{(T_H/T_L)-1} = \frac{1}{(27+273\text{ K})/(-5+273\text{ K})-1} = 8.37$$

Then the rate of heat removal from the refrigerated space becomes

$$\dot{Q}_{L,\text{R}} = (\text{COP}_{\text{R,rev}})(\dot{W}_{\text{net,in}}) = (8.37)(595.2\text{ kJ/min}) = \mathbf{4982\text{ kJ/min}}$$

(b) The total rate of heat rejection to the ambient air is the sum of the heat rejected by the heat engine ($\dot{Q}_{L,\text{HE}}$) and the heat discarded by the refrigerator ($\dot{Q}_{H,\text{R}}$),

$$\dot{Q}_{L,\text{HE}} = \dot{Q}_{H,\text{HE}} - \dot{W}_{\text{net,out}} = 800 - 595.2 = 204.8\text{ kJ/min}$$

$$\dot{Q}_{H,\text{R}} = \dot{Q}_{L,\text{R}} + \dot{W}_{\text{net,in}} = 4982 + 595.2 = 5577.2\text{ kJ/min}$$

and

$$\dot{Q}_{\text{ambient}} = \dot{Q}_{L,\text{HE}} + \dot{Q}_{H,\text{R}} = 204.8 + 5577.2 = \mathbf{5782\text{ kJ/min}}$$

6–102 A commercial refrigerator with refrigerant-134a as the working fluid is used to keep the refrigerated space at −35°C by rejecting waste heat to cooling water that enters the condenser at 18°C at a rate of 0.25 kg/s and leaves at

26°C. The refrigerant enters the condenser at 1.2 MPa and 50°C and leaves at the same pressure subcooled by 5°C. If the compressor consumes 3.3 kW of power, determine (*a*) the mass flow rate of the refrigerant, (*b*) the refrigeration load, (*c*) the COP, and (*d*) the minimum power input to the compressor for the same refrigeration load.

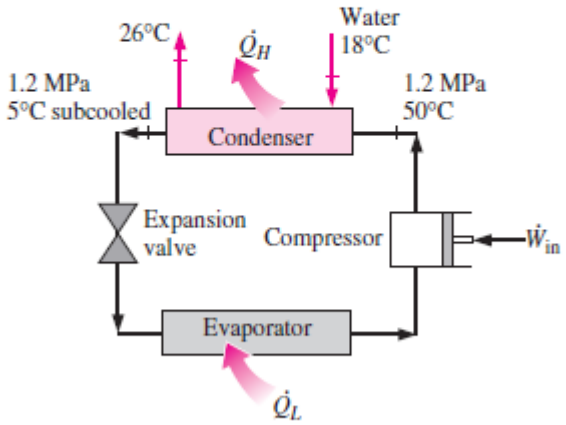

FIGURE P6–102

6-102 A commercial refrigerator with R-134a as the working fluid is considered. The condenser inlet and exit states are specified. The mass flow rate of the refrigerant, the refrigeration load, the COP, and the minimum power input to the compressor are to be determined.

Assumptions **1** The refrigerator operates steadily. **2** The kinetic and potential energy changes are zero.

Properties The properties of R-134a and water are (Steam and R-134a tables)

$$\left.\begin{array}{l} P_1 = 1.2\,\text{MPa} \\ T_1 = 50°\text{C} \end{array}\right\} h_1 = 278.27\ \text{kJ/kg}$$

$$T_2 = T_{\text{sat@1.2 MPa}} + \Delta T_{\text{subcool}} = 46.3 - 5 = 41.3°\text{C}$$

$$\left.\begin{array}{l} P_2 = 1.2\,\text{MPa} \\ T_2 = 41.3°\text{C} \end{array}\right\} h_2 = 110.17\ \text{kJ/kg}$$

$$\left.\begin{array}{l} T_{w,1} = 18°\text{C} \\ x_{w,1} = 0 \end{array}\right\} h_{w,1} = 75.54\ \text{kJ/kg}$$

$$\left.\begin{array}{l} T_{w,2} = 26°\text{C} \\ x_{w,2} = 0 \end{array}\right\} h_{w,2} = 109.01\ \text{kJ/kg}$$

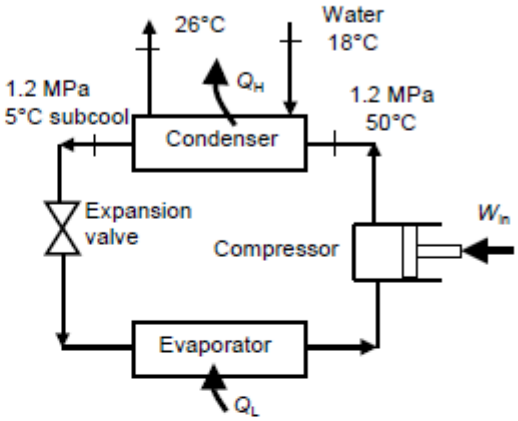

Analysis (*a*) The rate of heat transferred to the water is the energy change of the water from inlet to exit

$$\dot{Q}_H = \dot{m}_w (h_{w,2} - h_{w,1}) = (0.25\ \text{kg/s})(109.01 - 75.54)\ \text{kJ/kg} = 8.367\ \text{kW}$$

The energy decrease of the refrigerant is equal to the energy increase of the water in the condenser. That is,

$$\dot{Q}_H = \dot{m}_R (h_1 - h_2) \longrightarrow \dot{m}_R = \frac{\dot{Q}_H}{h_1 - h_2} = \frac{8.367\ \text{kW}}{(278.27 - 110.17)\ \text{kJ/kg}} = \mathbf{0.0498\ kg/s}$$

(*b*) The refrigeration load is

$$\dot{Q}_L = \dot{Q}_H - \dot{W}_{\text{in}} = 8.37 - 3.30 = \mathbf{5.07\ kW}$$

(*c*) The COP of the refrigerator is determined from its definition,

$$\text{COP} = \frac{\dot{Q}_L}{\dot{W}_{\text{in}}} = \frac{5.07\ \text{kW}}{3.3\ \text{kW}} = \mathbf{1.54}$$

(*d*) The COP of a reversible refrigerator operating between the same temperature limits is

$$\text{COP}_{\max} = \frac{1}{T_H / T_L - 1} = \frac{1}{(18 + 273)/(-35 + 273) - 1} = 4.49$$

Then, the minimum power input to the compressor for the same refrigeration load would be

$$\dot{W}_{\text{in,min}} = \frac{\dot{Q}_L}{\text{COP}_{\max}} = \frac{5.07\ \text{kW}}{4.49} = \mathbf{1.13\ kW}$$

6–103 An air-conditioner with refrigerant-134a as the working fluid is used to keep a room at 26°C by rejecting the waste heat to the outdoor air at 34°C. The room gains heat through the walls and the windows at a rate of 250 kJ/min while the heat generated by the computer, TV, and lights amounts to 900 W. The refrigerant enters the compressor at 500 kPa as a saturated vapor at a rate of 100 L/min and leaves at 1200 kPa and 50°C. Determine (*a*) the actual COP, (*b*) the maximum COP, and (*c*) the minimum volume flow rate of the refrigerant at the compressor inlet for the same compressor inlet and exit conditions. *Answers:* (*a*) 6.59, (*b*) 37.4, (*c*) 17.6 L/min

6-103 An air-conditioner with R-134a as the working fluid is considered. The compressor inlet and exit states are specified. The actual and maximum COPs and the minimum volume flow rate of the refrigerant at the compressor inlet are to be determined.

Assumptions **1** The air-conditioner operates steadily. **2** The kinetic and potential energy changes are zero.

Properties The properties of R-134a at the compressor inlet and exit states are (Tables A-11 through A-13)

$$\left.\begin{array}{l} P_1 = 500\,\text{kPa} \\ x_1 = 1 \end{array}\right\} \begin{array}{l} h_1 = 259.30\ \text{kJ/kg} \\ v_1 = 0.04112\ \text{m}^3/\text{kg} \end{array}$$

$$\left.\begin{array}{l} P_2 = 1.2\,\text{MPa} \\ T_2 = 50°\text{C} \end{array}\right\} h_2 = 278.27\ \text{kJ/kg}$$

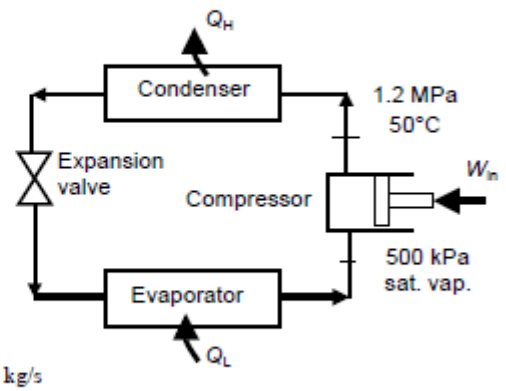

Analysis (*a*) The mass flow rate of the refrigerant and the power consumption of the compressor are

$$\dot{m}_R = \frac{\dot{V}_1}{v_1} = \frac{100\ \text{L/min}\left(\frac{1\ \text{m}^3}{1000\ \text{L}}\right)\left(\frac{1\ \text{min}}{60\ \text{s}}\right)}{0.04112\ \text{m}^3/\text{kg}} = 0.04053\ \text{kg/s}$$

$$\dot{W}_{in} = \dot{m}_R(h_2 - h_1) = (0.04053\ \text{kg/s})(278.27 - 259.30)\ \text{kJ/kg} = 0.7686\ \text{kW}$$

The heat gains to the room must be rejected by the air-conditioner. That is,

$$\dot{Q}_L = \dot{Q}_{heat} + \dot{Q}_{equipment} = (250\ \text{kJ/min})\left(\frac{1\ \text{min}}{60\ \text{s}}\right) + 0.9\ \text{kW} = 5.067\ \text{kW}$$

Then, the actual COP becomes

$$\text{COP} = \frac{\dot{Q}_L}{\dot{W}_{in}} = \frac{5.067\ \text{kW}}{0.7686\ \text{kW}} = \mathbf{6.59}$$

(*b*) The COP of a reversible refrigerator operating between the same temperature limits is

$$\text{COP}_{max}\ \frac{1}{T_H / T_L - 1} = \frac{1}{(34 + 273)/(26 + 273) - 1} = \mathbf{37.4}$$

(*c*) The minimum power input to the compressor for the same refrigeration load would be

$$\dot{W}_{in,min} = \frac{\dot{Q}_L}{\text{COP}_{max}} = \frac{5.067\ \text{kW}}{37.38} = 0.1356\ \text{kW}$$

The minimum mass flow rate is

$$\dot{m}_{R,min} = \frac{\dot{W}_{in,min}}{h_2 - h_1} = \frac{0.1356\ \text{kW}}{(278.27 - 259.30)\ \text{kJ/kg}} = 0.007149\ \text{kg/s}$$

Finally, the minimum volume flow rate at the compressor inlet is

$$\dot{V}_{min,1} = \dot{m}_{R,min} v_1 = (0.007149\ \text{kg/s})(0.04112\ \text{m}^3/\text{kg}) = 0.000294\ \text{m}^3/\text{s} = \mathbf{17.64\ L/min}$$

6–109 The "Energy Guide" label of a refrigerator states that the refrigerator will consume $74 worth of electricity per year under normal use if the cost of electricity is $0.07/kWh. If the electricity consumed by the lightbulb is negligible and the refrigerator consumes 300 W when running, determine the fraction of the time the refrigerator will run.

6-109 A refrigerator consumes 300 W when running, and $74 worth of electricity per year under normal use. The fraction of the time the refrigerator will run in a year is to be determined.

Assumptions The electricity consumed by the light bulb is negligible.

Analysis The total amount of electricity the refrigerator uses a year is

$$\text{Total electric energy used} = \overline{W}_{e,\text{total}} = \frac{\text{Total cost of energy}}{\text{Unit cost of energy}} = \frac{\$74/\text{year}}{\$0.07/\text{kWh}} = 1057\ \text{kWh/year}$$

The number of hours the refrigerator is on per year is

$$\text{Total operating hours} = \Delta t = \frac{\overline{W}_{e,\text{total}}}{\dot{W}_e} = \frac{1057\ \text{kWh}}{0.3\ \text{kW}} = 3524\ \text{h/year}$$

Noting that there are 365×24=8760 hours in a year, the fraction of the time the refrigerator is on during a year is determined to be

$$\text{Time fraction on} = \frac{\text{Total operating hours}}{\text{Total hours per year}} = \frac{3524/\text{year}}{8760\ \text{h/year}} = \mathbf{0.402}$$

Therefore, the refrigerator remained on 40.2% of the time.

6–114 A heat pump with a COP of 2.4 is used to heat a house. When running, the heat pump consumes 8 kW of electric power. If the house is losing heat to the outside at an average rate of 40,000 kJ/h and the temperature of the house is 3°C when the heat pump is turned on, determine how long it will take for the temperature in the house to rise to 22°C. Assume the house is well sealed (i.e., no air leaks) and take the entire mass within the house (air, furniture, etc.) to be equivalent to 2000 kg of air.

6-114 A heat pump with a specified COP is to heat a house. The rate of heat loss of the house and the power consumption of the heat pump are given. The time it will take for the interior temperature to rise from 3°C to 22°C is to be determined.

Assumptions **1** Air is an ideal gas with constant specific heats at room temperature. **2** The house is well-sealed so that no air leaks in or out. **3** The COP of the heat pump remains constant during operation.

Properties The constant volume specific heat of air at room temperature is $c_v = 0.718$ kJ/kg.°C (Table A-2)

Analysis The house is losing heat at a rate of

$$\dot{Q}_{\text{Loss}} = 40{,}000\ \text{kJ/h} = 11.11\ \text{kJ/s}$$

The rate at which this heat pump supplies heat is

$$\dot{Q}_H = \text{COP}_{\text{HP}}\overline{W}_{\text{net,in}} = (2.4)(8\ \text{kW}) = 19.2\ \text{kW}$$

That is, this heat pump can supply heat at a rate of 19.2 kJ/s. Taking the house as the system (a closed system), the energy balance can be written as

$$\underbrace{E_{\text{in}} - E_{\text{out}}}_{\substack{\text{Net energy transfer}\\ \text{by heat, work, and mass}}} = \underbrace{\Delta E_{\text{system}}}_{\substack{\text{Change in internal, kinetic,}\\ \text{potential, etc. energies}}}$$

$$Q_{\text{in}} - Q_{\text{out}} = \Delta U = m(u_2 - u_1)$$

$$Q_{\text{in}} - Q_{\text{out}} = mc_v(T_2 - T_1)$$

$$(\dot{Q}_{\text{in}} - \dot{Q}_{\text{out}})\Delta t = mc_v(T_2 - T_1)$$

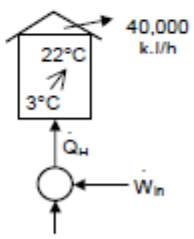

Substituting, $(19.2 - 11.11\text{kJ/s})\Delta t = (2000\text{kg})(0.718\text{kJ/kg}\cdot{}^\circ\text{C})(22-3)^\circ\text{C}$

Solving for Δt, it will take

$$\Delta t = 3373\ \text{s} = \mathbf{0.937\ h}$$

for the temperature in the house to rise to 22°C.

6–117 An air-conditioning system is used to maintain a house at a constant temperature of 20°C. The house is gaining heat from outdoors at a rate of 20,000 kJ/h, and the heat generated in the house from the people, lights, and appliances amounts to 8000 kJ/h. For a COP of 2.5, determine the required power input to this air-conditioning system. *Answer:* 3.11 kW

6-117 An air-conditioning system maintains a house at a specified temperature. The rate of heat gain of the house, the rate of internal heat generation, and the COP are given. The required power input is to be determined.

Assumptions Steady operating conditions exist.

Analysis The cooling load of this air-conditioning system is the sum of the heat gain from the outdoors and the heat generated in the house from the people, lights, and appliances:

$$\dot{Q}_L = 20{,}000 + 8{,}000 = 28{,}000 \text{ kJ/h}$$

Using the definition of the coefficient of performance, the power input to the air-conditioning system is determined to be

$$\dot{W}_{\text{net,in}} = \frac{\dot{Q}_L}{\text{COP}_R} = \frac{28{,}000 \text{ kJ/h}}{2.5}\left(\frac{1 \text{ kW}}{3600 \text{ kJ/h}}\right) = 3.11 \text{ kW}$$

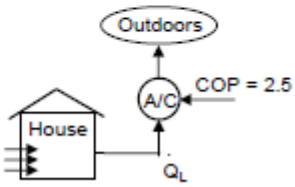

6–128 A Carnot heat engine receives heat at 750 K and rejects the waste heat to the environment at 300 K. The entire work output of the heat engine is used to drive a Carnot refrigerator that removes heat from the cooled space at −15°C at a rate of 400 kJ/min and rejects it to the same environment at 300 K. Determine (*a*) the rate of heat supplied to the heat engine and (*b*) the total rate of heat rejection to the environment.

6-128 A Carnot heat engine drives a Carnot refrigerator that removes heat from a cold medium at a specified rate. The rate of heat supply to the heat engine and the total rate of heat rejection to the environment are to be determined.

Analysis (*a*) The coefficient of performance of the Carnot refrigerator is

$$\mathrm{COP}_{\mathrm{R,C}} = \frac{1}{(T_H/T_L)-1} = \frac{1}{(300\ \mathrm{K})/(258\ \mathrm{K})-1} = 6.14$$

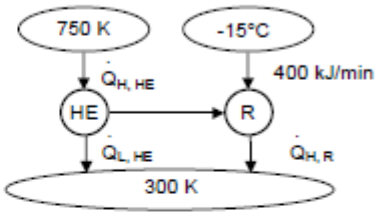

Then power input to the refrigerator becomes

$$\dot{W}_{\mathrm{net,in}} = \frac{\dot{Q}_L}{\mathrm{COP}_{\mathrm{R,C}}} = \frac{400\ \mathrm{kJ/min}}{6.14} = 65.1\ \mathrm{kJ/min}$$

which is equal to the power output of the heat engine, $\dot{W}_{\mathrm{net,out}}$.

The thermal efficiency of the Carnot heat engine is determined from

$$\eta_{\mathrm{th,C}} = 1 - \frac{T_L}{T_H} = 1 - \frac{300\ \mathrm{K}}{750\ \mathrm{K}} = 0.60$$

Then the rate of heat input to this heat engine is determined from the definition of thermal efficiency to be

$$\dot{Q}_{H,\mathrm{HE}} = \frac{\dot{W}_{\mathrm{net,out}}}{\eta_{\mathrm{th,HE}}} = \frac{65.1\ \mathrm{kJ/min}}{0.60} = \mathbf{108.5\ kJ/min}$$

(*b*) The total rate of heat rejection to the ambient air is the sum of the heat rejected by the heat engine ($\dot{Q}_{L,\mathrm{HE}}$) and the heat discarded by the refrigerator ($\dot{Q}_{H,\mathrm{R}}$),

$$\dot{Q}_{L,\mathrm{HE}} = \dot{Q}_{H,\mathrm{HE}} - \dot{W}_{\mathrm{net,out}} = 108.5 - 65.1 = 43.4\ \mathrm{kJ/min}$$

$$\dot{Q}_{H,\mathrm{R}} = \dot{Q}_{L,\mathrm{R}} + \dot{W}_{\mathrm{net,in}} = 400 + 65.1 = 465.1\ \mathrm{kJ/min}$$

and

$$\dot{Q}_{\mathrm{Ambient}} = \dot{Q}_{L,\mathrm{HE}} + \dot{Q}_{H,\mathrm{R}} = 43.4 + 465.1 = \mathbf{508.5\ kJ/min}$$

6–138 The drinking water needs of a production facility with 20 employees is to be met by a bobbler type water fountain. The refrigerated water fountain is to cool water from 22 to 8°C and supply cold water at a rate of 0.4 L per hour per person. Heat is transferred to the reservoir from the surroundings at

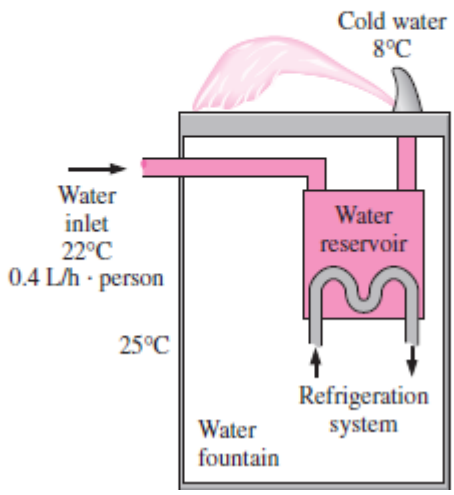

6-138 The drinking water needs of a production facility with 20 employees is to be met by a bobbler type water fountain. The size of compressor of the refrigeration system of this water cooler is to be determined.

Assumptions 1 Steady operating conditions exist. 2 Water is an incompressible substance with constant properties at room temperature. 3 The cold water requirement is 0.4 L/h per person.

Properties The density and specific heat of water at room temperature are ρ = 1.0 kg/L and c = 4.18 kJ/kg.°C.C (Table A-3).

Analysis The refrigeration load in this case consists of the heat gain of the reservoir and the cooling of the incoming water. The water fountain must be able to provide water at a rate of

$$\dot{m}_{water} = \rho \dot{V}_{water} = (1\,\text{kg/L})(0.4\,\text{L/h}\cdot\text{person})(20\,\text{persons}) = 8.0\,\text{kg/h}$$

To cool this water from 22°C to 8°C, heat must removed from the water at a rate of

$$\dot{Q}_{cooling} = \dot{m}c_p(T_{in} - T_{out})$$
$$= (8.0\,\text{kg/h})(4.18\,\text{kJ/kg.°C})(22-8)\text{°C}$$
$$= 468\,\text{kJ/h} = 130\,\text{W} \quad (\text{since } 1\,\text{W} = 3.6\,\text{kJ/h})$$

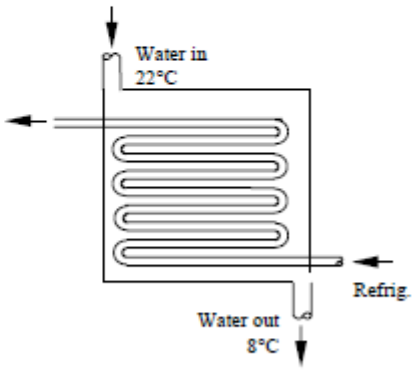

Then total refrigeration load becomes

$$\dot{Q}_{refrig,\,total} = \dot{Q}_{cooling} + \dot{Q}_{transfer} = 130 + 45 = 175\,\text{W}$$

Noting that the coefficient of performance of the refrigeration system is 2.9, the required power input is

$$\dot{W}_{refrig} = \frac{\dot{Q}_{refrig}}{\text{COP}} = \frac{175\,\text{W}}{2.9} = \mathbf{60.3\ W}$$

Therefore, the power rating of the compressor of this refrigeration system must be at least 60.3 W to meet the cold water requirements of this office.

6–148 A heat pump with refrigerant-134a as the working fluid is used to keep a space at 25°C by absorbing heat from geothermal water that enters the evaporator at 50°C at a rate of 0.065 kg/s and leaves at 40°C. Refrigerant enters the evaporator at 20°C with a quality of 15 percent and leaves at the same pressure as saturated vapor. If the compressor consumes 1.2 kW of power, determine (*a*) the mass flow rate of the refrigerant, (*b*) the rate of heat supply, (*c*) the COP, and (*d*) the minimum power input to the compressor for the same rate of heat supply. *Answers:* (*a*) 0.0175 kg/s, (*b*) 3.92 kW, (*c*) 3.27, (*d*) 0.303 kW

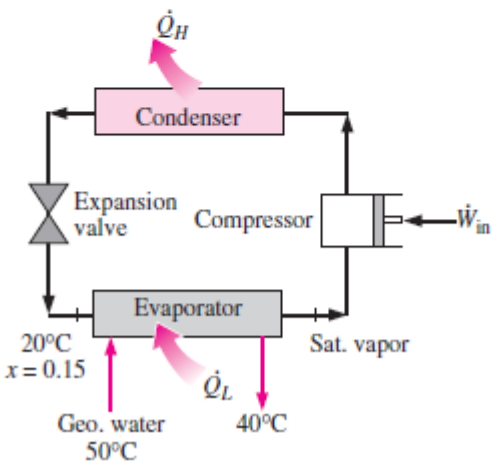

6-148 A geothermal heat pump with R-134a as the working fluid is considered. The evaporator inlet and exit states are specified. The mass flow rate of the refrigerant, the heating load, the COP, and the minimum power input to the compressor are to be determined.

Assumptions **1** The heat pump operates steadily. **2** The kinetic and potential energy changes are zero. **3** Steam properties are used for geothermal water.

Properties The properties of R-134a and water are (Steam and R-134a tables)

$$\left.\begin{array}{l} T_1 = 20°\text{C} \\ x_1 = 0.15 \end{array}\right\} \begin{array}{l} h_1 = 106.66 \text{ kJ/kg} \\ P_1 = 572.1 \text{ kPa} \end{array}$$

$$\left.\begin{array}{l} P_2 = P_1 = 572.1 \text{ kPa} \\ x_2 = 1 \end{array}\right\} h_2 = 261.59 \text{ kJ/kg}$$

$$\left.\begin{array}{l} T_{w,1} = 50°\text{C} \\ x_{w,1} = 0 \end{array}\right\} h_{w,1} = 209.34 \text{ kJ/kg}$$

$$\left.\begin{array}{l} T_{w,2} = 40°\text{C} \\ x_{w,2} = 0 \end{array}\right\} h_{w,2} = 167.53 \text{ kJ/kg}$$

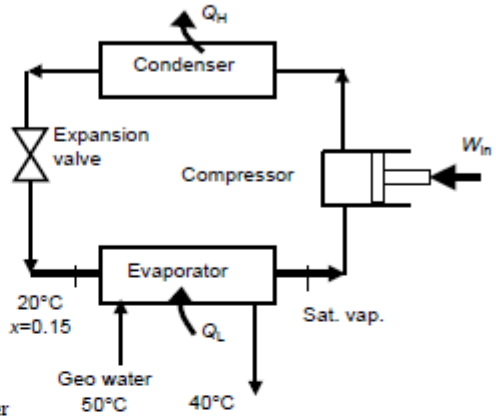

Analysis (*a*) The rate of heat transferred from the water is the energy change of the water from inlet to exit

$$\dot{Q}_L = \dot{m}_w (h_{w,1} - h_{w,2}) = (0.065 \text{ kg/s})(209.34 - 167.53) \text{ kJ/kg} = 2.718 \text{ kW}$$

The energy increase of the refrigerant is equal to the energy decrease of the water in the evaporator. That is,

$$\dot{Q}_L = \dot{m}_R (h_2 - h_1) \longrightarrow \dot{m}_R = \frac{\dot{Q}_L}{h_2 - h_1} = \frac{2.718 \text{ kW}}{(261.59 - 106.66) \text{ kJ/kg}} = \mathbf{0.0175 \text{ kg/s}}$$

(*b*) The heating load is

$$\dot{Q}_H = \dot{Q}_L + \dot{W}_{in} = 2.718 + 1.2 = \mathbf{3.92 \text{ kW}}$$

(*c*) The COP of the heat pump is determined from its definition,

$$\text{COP} = \frac{\dot{Q}_H}{\dot{W}_{in}} = \frac{3.92 \text{ kW}}{1.2 \text{ kW}} = \mathbf{3.27}$$

(*d*) The COP of a reversible heat pump operating between the same temperature limits is

$$\text{COP}_{max} = \frac{1}{1 - T_L / T_H} = \frac{1}{1 - (25 + 273)/(50 + 273)} = 12.92$$

Then, the minimum power input to the compressor for the same refrigeration load would be

$$\dot{W}_{in,min} = \frac{\dot{Q}_H}{\text{COP}_{max}} = \frac{3.92 \text{ kW}}{12.92} = \mathbf{0.303 \text{ kW}}$$

6–149 Cold water at 10°C enters a water heater at the rate of 0.02 m³/min and leaves the water heater at 50°C. The water heater receives heat from a heat pump that receives heat from a heat source at 0°C.

(*a*) Assuming the water to be an incompressible liquid that does not change phase during heat addition, determine the rate of heat supplied to the water, in kJ/s.

(*b*) Assuming the water heater acts as a heat sink having an average temperature of 30°C, determine the minimum power supplied to the heat pump, in kW.

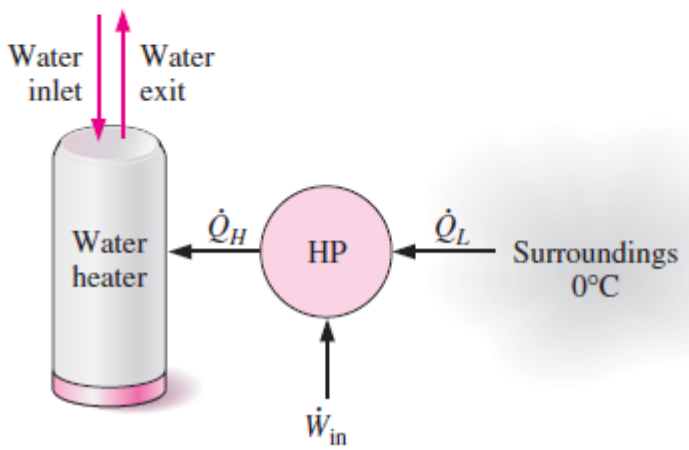

6-149 A heat pump is used as the heat source for a water heater. The rate of heat supplied to the water and the minimum power supplied to the heat pump are to be determined.

Assumptions **1** Steady operating conditions exist. **2** The kinetic and potential energy changes are zero.

Properties The specific heat and specific volume of water at room temperature are c_p = 4.18 kJ/kg.K and v=0.001 m³/kg (Table A-3).

Analysis (*a*) An energy balance on the water heater gives the rate of heat supplied to the water

$$\dot{Q}_H = \dot{m}c_p(T_2 - T_1) = \frac{\dot{V}}{v}c_p(T_2 - T_1) = \frac{(0.02/60)\,\text{m}^3/\text{s}}{0.001\,\text{m}^3/\text{kg}}(4.18\,\text{kJ/kg.°C})(50-10)\,°\text{C} = \mathbf{55.73\ kW}$$

(*b*) The COP of a reversible heat pump operating between the specified temperature limits is

$$\text{COP}_{\max} = \frac{1}{1 - T_L/T_H} = \frac{1}{1-(0+273)/(30+273)} = 10.1$$

Then, the minimum power input would be

$$\dot{W}_{\text{in,min}} = \frac{\dot{Q}_H}{\text{COP}_{\max}} = \frac{55.73\,\text{kW}}{10.1} = \mathbf{5.52\ kW}$$

6–150 A heat pump receives heat from a lake that has an average winter time temperature of 6°C and supplies heat into a house having an average temperature of 27°C.

(*a*) If the house loses heat to the atmosphere at the rate of 64,000 kJ/h, determine the minimum power supplied to the heat pump, in kW.

(*b*) A heat exchanger is used to transfer the energy from the lake water to the heat pump. If the lake water temperature decreases by 5°C as it flows through the lake water-to-heat pump heat exchanger, determine the minimum mass flow rate of lake water, in kg/s. Neglect the effect of the lake water pump.

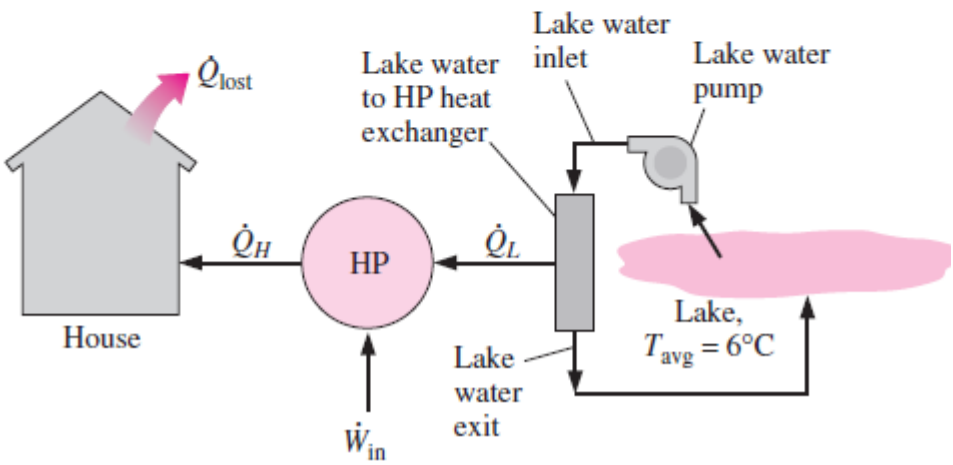

6-150 A heat pump receiving heat from a lake is used to heat a house. The minimum power supplied to the heat pump and the mass flow rate of lake water are to be determined.

Assumptions **1** Steady operating conditions exist. **2** The kinetic and potential energy changes are zero.

Properties The specific heat of water at room temperature is c_p = 4.18 kJ/kg.K (Table A-3).

Analysis (*a*) The COP of a reversible heat pump operating between the specified temperature limits is

$$\text{COP}_{\max} = \frac{1}{1 - T_L / T_H} = \frac{1}{1 - (6+273)/(27+273)} = 14.29$$

Then, the minimum power input would be

$$\dot{W}_{\text{in,min}} = \frac{\dot{Q}_H}{\text{COP}_{\max}} = \frac{(64{,}000/3600)\,\text{kW}}{14.29} = \mathbf{1.244\ kW}$$

(*b*) The rate of heat absorbed from the lake is

$$\dot{Q}_L = \dot{Q}_H - \dot{W}_{\text{in,min}} = 17.78 - 1.244 = 16.53\,\text{kW}$$

An energy balance on the heat exchanger gives the mass flow rate of lake water

$$\dot{m}_{\text{water}} = \frac{\dot{Q}_L}{c_p \Delta T} = \frac{16.53\,\text{kJ/s}}{(4.18\,\text{kJ/kg.°C})(5\,°\text{C})} = \mathbf{0.791\ kg/s}$$