SIMPLE RANKINE CYCLE

10–7C What four processes make up the simple ideal Rankine cycle?

10–8C Consider a simple ideal Rankine cycle with fixed turbine inlet conditions. What is the effect of lowering the condenser pressure on

Pump work input:	(*a*) increases, (*b*) decreases, (*c*) remains the same
Turbine work output:	(*a*) increases, (*b*) decreases, (*c*) remains the same
Heat supplied:	(*a*) increases, (*b*) decreases, (*c*) remains the same
Heat rejected:	(*a*) increases, (*b*) decreases, (*c*) remains the same
Cycle efficiency:	(*a*) increases, (*b*) decreases, (*c*) remains the same
Moisture content at turbine exit:	(a) increases, (b) decreases, (c) remains the same

10–9C Consider a simple ideal Rankine cycle with fixed turbine inlet temperature and condenser pressure. What is the effect of increasing the boiler pressure on

Pump work input:	(*a*) increases, (*b*) decreases, (*c*) remains the same
Turbine work output:	(*a*) increases, (*b*) decreases, (*c*) remains the same
Heat supplied:	(*a*) increases, (*b*) decreases, (*c*) remains the same
Heat rejected:	(*a*) increases, (*b*) decreases, (*c*) remains the same
Cycle efficiency:	(*a*) increases, (*b*) decreases, (*c*) remains the same
Moisture content at turbine exit:	(*a*) increases, (*b*) decreases, (*c*) remains the same

10–10C Consider a simple ideal Rankine cycle with fixed boiler and condenser pressures. What is the effect of superheating the steam to a higher temperature on

Pump work input:	(*a*) increases, (*b*) decreases, (*c*) remains the same
Turbine work output:	(*a*) increases, (*b*) decreases, (*c*) remains the same
Heat supplied:	(*a*) increases, (*b*) decreases, (*c*) remains the same
Heat rejected:	(*a*) increases, (*b*) decreases, (*c*) remains the same
Cycle efficiency:	(*a*) increases, (*b*) decreases, (*c*) remains the same
Moisture content at turbine exit:	(*a*) increases, (*b*) decreases, (*c*) remains the same

10–11C How do actual vapor power cycles differ from idealized ones?

10–12C Compare the pressures at the inlet and the exit of the boiler for (*a*) actual and (*b*) ideal cycles.

10–13C The entropy of steam increases in actual steam turbines as a result of irreversibilities. In an effort to control entropy increase, it is proposed to cool the steam in the turbine by running cooling water around the turbine casing. It is argued that this will reduce the entropy and the enthalpy of the steam at the turbine exit and thus increase the work output. How would you evaluate this proposal?

10–14C Is it possible to maintain a pressure of 10 kPa in a condenser that is being cooled by river water entering at 20°C?

10-7C The four processes that make up the simple ideal cycle are (1) Isentropic compression in a pump, (2) P = constant heat addition in a boiler, (3) Isentropic expansion in a turbine, and (4) P = constant heat rejection in a condenser.

10-8C Heat rejected decreases; everything else increases.

10-9C Heat rejected decreases; everything else increases.

10-10C The pump work remains the same, the moisture content decreases, everything else increases.

10-11C The actual vapor power cycles differ from the idealized ones in that the actual cycles involve friction and pressure drops in various components and the piping, and heat loss to the surrounding medium from these components and piping.

10-12C The boiler exit pressure will be (a) lower than the boiler inlet pressure in actual cycles, and (b) the same as the boiler inlet pressure in ideal cycles.

10-13C We would reject this proposal because $w_{turb} = h_1 - h_2 - q_{out}$, and any heat loss from the steam will adversely affect the turbine work output.

10-14C Yes, because the saturation temperature of steam at 10 kPa is 45.81°C, which is much higher than the temperature of the cooling water.

10–15 A steam power plant operates on a simple ideal Rankine cycle between the pressure limits of 3 MPa and 50 kPa. The temperature of the steam at the turbine inlet is 300°C, and the mass flow rate of steam through the cycle is 35 kg/s. Show the cycle on a *T-s* diagram with respect to saturation lines, and determine (*a*) the thermal efficiency of the cycle and (*b*) the net power output of the power plant.

10-15 A steam power plant operates on a simple ideal Rankine cycle between the specified pressure limits. The thermal efficiency of the cycle and the net power output of the plant are to be determined.

Assumptions **1** Steady operating conditions exist. **2** Kinetic and potential energy changes are negligible.

Analysis (*a*) From the steam tables (Tables A-4, A-5, and A-6),

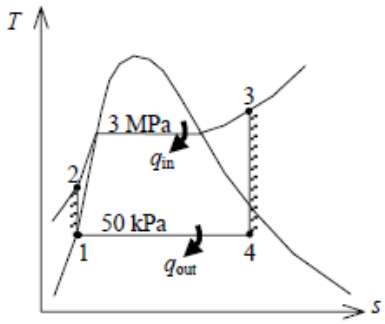

$$h_1 = h_{f@\,50\text{ kPa}} = 340.54 \text{ kJ/kg}$$
$$v_1 = v_{f@\,50\text{ kPa}} = 0.001030 \text{ m}^3\text{/kg}$$

$$w_{p,\text{in}} = v_1(P_2 - P_1)$$
$$= (0.001030 \text{ m}^3\text{/kg})(3000-50)\text{kPa}\left(\frac{1 \text{ kJ}}{1 \text{ kPa}\cdot\text{m}^3}\right)$$
$$= 3.04 \text{ kJ/kg}$$
$$h_2 = h_1 + w_{p,\text{in}} = 340.54 + 3.04 = 343.58 \text{ kJ/kg}$$

$$\left.\begin{array}{l} P_3 = 3 \text{ MPa} \\ T_3 = 300\,°\text{C} \end{array}\right\} \begin{array}{l} h_3 = 2994.3 \text{ kJ/kg} \\ s_3 = 6.5412 \text{ kJ/kg}\cdot\text{K} \end{array}$$

$$\left.\begin{array}{l} P_4 = 50 \text{ kPa} \\ s_4 = s_3 \end{array}\right\} x_4 = \frac{s_4 - s_f}{s_{fg}} = \frac{6.5412 - 1.0912}{6.5019} = 0.8382$$
$$h_4 = h_f + x_4 h_{fg} = 340.54 + (0.8382)(2304.7)$$
$$= 2272.3 \text{ kJ/kg}$$

Thus,

$$q_{\text{in}} = h_3 - h_2 = 2994.3 - 343.58 = 2650.7 \text{ kJ/kg}$$
$$q_{\text{out}} = h_4 - h_1 = 2272.3 - 340.54 = 1931.8 \text{ kJ/kg}$$
$$w_{\text{net}} = q_{\text{in}} - q_{\text{out}} = 2650.7 - 1931.8 = 718.9 \text{ kJ/kg}$$

and

$$\eta_{\text{th}} = 1 - \frac{q_{\text{out}}}{q_{\text{in}}} = 1 - \frac{1931.8}{2650.7} = \mathbf{27.1\%}$$

(*b*) $$\dot{W}_{\text{net}} = \dot{m} w_{\text{net}} = (35 \text{ kg/s})(718.9 \text{ kJ/kg}) = \mathbf{25.2 \text{ MW}}$$

10–16 Consider a 210-MW steam power plant that operates on a simple ideal Rankine cycle. Steam enters the turbine at 10 MPa and 500°C and is cooled in the condenser at a pressure of 10 kPa. Show the cycle on a *T-s* diagram with respect to saturation lines, and determine (*a*) the quality of the steam at the turbine exit, (*b*) the thermal efficiency of the cycle, and (*c*) the mass flow rate of the steam. *Answers:* (*a*) 0.793, (*b*) 40.2 percent, (*c*) 165 kg/s

10-16 A steam power plant that operates on a simple ideal Rankine cycle is considered. The quality of the steam at the turbine exit, the thermal efficiency of the cycle, and the mass flow rate of the steam are to be determined.

Assumptions **1** Steady operating conditions exist. **2** Kinetic and potential energy changes are negligible.

Analysis (*a*) From the steam tables (Tables A-4, A-5, and A-6),

$$h_1 = h_{f@10\text{ kPa}} = 191.81 \text{ kJ/kg}$$
$$v_1 = v_{f@10\text{ kPa}} = 0.00101 \text{ m}^3\text{/kg}$$

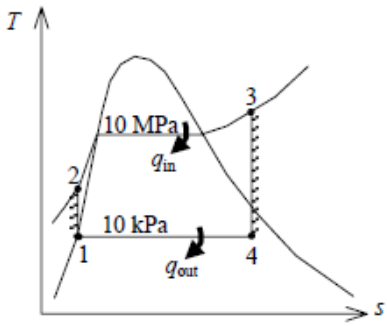

$$w_{p,in} = v_1(P_2 - P_1)$$
$$= (0.00101 \text{ m}^3\text{/kg})(10{,}000 - 10 \text{ kPa})\left(\frac{1 \text{ kJ}}{1 \text{ kPa}\cdot\text{m}^3}\right)$$
$$= 10.09 \text{ kJ/kg}$$
$$h_2 = h_1 + w_{p,in} = 191.81 + 10.09 = 201.90 \text{ kJ/kg}$$

$$\left.\begin{array}{l} P_3 = 10 \text{ MPa} \\ T_3 = 500\,°\text{C} \end{array}\right\} \begin{array}{l} h_3 = 3375.1 \text{ kJ/kg} \\ s_3 = 6.5995 \text{ kJ/kg}\cdot\text{K} \end{array}$$

$$\left.\begin{array}{l} P_4 = 10 \text{ kPa} \\ s_4 = s_3 \end{array}\right\} x_4 = \frac{s_4 - s_f}{s_{fg}} = \frac{6.5995 - 0.6492}{7.4996} = \mathbf{0.7934}$$

$$h_4 = h_f + x_4 h_{fg} = 191.81 + (0.7934)(2392.1) = 2089.7 \text{ kJ/kg}$$

(*b*)
$$q_{in} = h_3 - h_2 = 3375.1 - 201.90 = 3173.2 \text{ kJ/kg}$$
$$q_{out} = h_4 - h_1 = 2089.7 - 191.81 = 1897.9 \text{ kJ/kg}$$
$$w_{net} = q_{in} - q_{out} = 3173.2 - 1897.9 = 1275.4 \text{ kJ/kg}$$

and

$$\eta_{th} = \frac{w_{net}}{q_{in}} = \frac{1275.4 \text{ kJ/kg}}{3173.2 \text{ kJ/kg}} = \mathbf{40.2\%}$$

(*c*)
$$\dot{m} = \frac{\dot{W}_{net}}{w_{net}} = \frac{210{,}000 \text{ kJ/s}}{1275.4 \text{ kJ/kg}} = \mathbf{164.7 \text{ kg/s}}$$

10–17 Repeat Prob. 10–16 assuming an isentropic efficiency of 85 percent for both the turbine and the pump.
Answers: (*a*) 0.874, (*b*) 34.1 percent, (*c*) 194 kg/s

10-17 A steam power plant that operates on a simple nonideal Rankine cycle is considered. The quality of the steam at the turbine exit, the thermal efficiency of the cycle, and the mass flow rate of the steam are to be determined.

Assumptions **1** Steady operating conditions exist. **2** Kinetic and potential energy changes are negligible.

Analysis (*a*) From the steam tables (Tables A-4, A-5, and A-6),

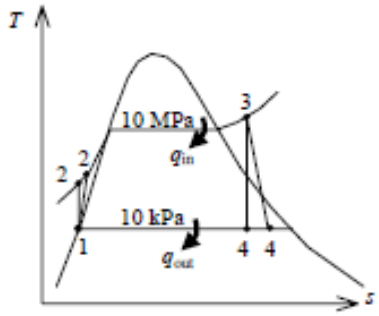

$$h_1 = h_{f@10\text{ kPa}} = 191.81 \text{ kJ/kg}$$
$$v_1 = v_{f@10\text{ kPa}} = 0.00101 \text{ m}^3/\text{kg}$$

$$w_{p,\text{in}} = v_1(P_2 - P_1)/\eta_p$$
$$= (0.00101 \text{ m}^3/\text{kg})(10{,}000 - 10 \text{ kPa})\left(\frac{1 \text{ kJ}}{1 \text{ kPa}\cdot\text{m}^3}\right)/(0.85)$$
$$= 11.87 \text{ kJ/kg}$$
$$h_2 = h_1 + w_{p,\text{in}} = 191.81 + 11.87 = 203.68 \text{ kJ/kg}$$

$$\left.\begin{array}{l} P_3 = 10 \text{ MPa} \\ T_3 = 500\,^\circ\text{C} \end{array}\right\} \begin{array}{l} h_3 = 3375.1 \text{ kJ/kg} \\ s_3 = 6.5995 \text{ kJ/kg}\cdot\text{K} \end{array}$$

$$\left.\begin{array}{l} P_{4s} = 10 \text{ kPa} \\ s_{4s} = s_3 \end{array}\right\} x_{4s} = \frac{s_{4s} - s_f}{s_{fg}} = \frac{6.5995 - 0.6492}{7.4996} = \mathbf{0.7934}$$
$$h_{4s} = h_f + x_4 h_{fg} = 191.81 + (0.7934)(2392.1) = 2089.7 \text{ kJ/kg}$$

$$\eta_T = \frac{h_3 - h_4}{h_3 - h_{4s}} \longrightarrow h_4 = h_3 - \eta_T(h_3 - h_{4s})$$
$$= 3375.1 - (0.85)(3375.1 - 2089.7) = 2282.5 \text{ kJ/kg}$$

$$\left.\begin{array}{l} P_4 = 10 \text{ kPa} \\ h_4 = 2282.5 \text{ kJ/kg} \end{array}\right\} x_4 = \frac{h_4 - h_f}{h_{fg}} = \frac{2282.5 - 191.81}{2392.1} = \mathbf{0.874}$$

(*b*)
$$q_{\text{in}} = h_3 - h_2 = 3375.1 - 203.68 = 3171.4 \text{ kJ/kg}$$
$$q_{\text{out}} = h_4 - h_1 = 2282.5 - 191.81 = 2090.7 \text{ kJ/kg}$$
$$w_{\text{net}} = q_{\text{in}} - q_{\text{out}} = 3171.4 - 2090.7 = 1080.7 \text{ kJ/kg}$$

and

$$\eta_{\text{th}} = \frac{w_{\text{net}}}{q_{\text{in}}} = \frac{1080.7 \text{ kJ/kg}}{3171.5 \text{ kJ/kg}} = \mathbf{34.1\%}$$

(*c*)
$$\dot{m} = \frac{\dot{W}_{\text{net}}}{w_{\text{net}}} = \frac{210{,}000 \text{ kJ/s}}{1080.7 \text{ kJ/kg}} = \mathbf{194.3 \text{ kg/s}}$$

10–20 Consider a coal-fired steam power plant that produces 300 MW of electric power. The power plant operates on a simple ideal Rankine cycle with turbine inlet conditions of 5 MPa and 450°C and a condenser pressure of 25 kPa. The coal has a heating value (energy released when the fuel is burned) of 29,300 kJ/kg. Assuming that 75 percent of this energy is transferred to the steam in the boiler and that the electric generator has an efficiency of 96 percent, determine (*a*) the overall plant efficiency (the ratio of net electric power output to the energy input as fuel) and (*b*) the required rate of coal supply. *Answers:* (*a*) 24.5 percent, (*b*) 150 t/h

10-20 A 300-MW coal-fired steam power plant operates on a simple ideal Rankine cycle between the specified pressure limits. The overall plant efficiency and the required rate of the coal supply are to be determined.

Assumptions **1** Steady operating conditions exist. **2** Kinetic and potential energy changes are negligible.

Analysis (*a*) From the steam tables (Tables A-4, A-5, and A-6),

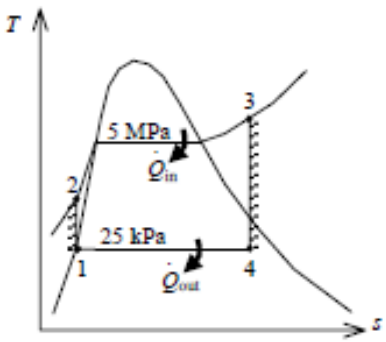

$$h_1 = h_{f@25\text{ kPa}} = 271.96 \text{ kJ/kg}$$
$$v_1 = v_{f@25\text{ kPa}} = 0.001020 \text{ m}^3\text{/kg}$$

$$w_{p,\text{in}} = v_1(P_2 - P_1)$$
$$= (0.00102 \text{ m}^3\text{/kg})(5000 - 25 \text{ kPa})\left(\frac{1 \text{ kJ}}{1 \text{ kPa}\cdot\text{m}^3}\right)$$
$$= 5.07 \text{ kJ/kg}$$
$$h_2 = h_1 + w_{p,\text{in}} = 271.96 + 5.07 = 277.03 \text{ kJ/kg}$$

$$\left.\begin{array}{l} P_3 = 5 \text{ MPa} \\ T_3 = 450°\text{C} \end{array}\right\} \begin{array}{l} h_3 = 3317.2 \text{ kJ/kg} \\ s_3 = 6.8210 \text{ kJ/kg}\cdot\text{K} \end{array}$$

$$\left.\begin{array}{l} P_4 = 25 \text{ kPa} \\ s_4 = s_3 \end{array}\right\} x_4 = \frac{s_4 - s_f}{s_{fg}} = \frac{6.8210 - 0.8932}{6.9370} = 0.8545$$
$$h_4 = h_f + x_4 h_{fg} = 271.96 + (0.8545)(2345.5) = 2276.2 \text{ kJ/kg}$$

The thermal efficiency is determined from

$$q_{\text{in}} = h_3 - h_2 = 3317.2 - 277.03 = 3040.2 \text{ kJ/kg}$$
$$q_{\text{out}} = h_4 - h_1 = 2276.2 - 271.96 = 2004.2 \text{ kJ/kg}$$

and

$$\eta_{\text{th}} = 1 - \frac{q_{\text{out}}}{q_{\text{in}}} = 1 - \frac{2004.2}{3040.2} = 0.3407$$

Thus,

$$\eta_{\text{overall}} = \eta_{\text{th}} \times \eta_{\text{comb}} \times \eta_{\text{gen}} = (0.3407)(0.75)(0.96) = \mathbf{24.5\%}$$

(*b*) Then the required rate of coal supply becomes

$$\dot{Q}_{\text{in}} = \frac{\dot{W}_{\text{net}}}{\eta_{\text{overall}}} = \frac{300{,}000 \text{ kJ/s}}{0.2453} = 1{,}222{,}992 \text{ kJ/s}$$

and

$$\dot{m}_{\text{coal}} = \frac{\dot{Q}_{\text{in}}}{C_{\text{coal}}} = \frac{1{,}222{,}992 \text{ kJ/s}}{29{,}300 \text{ kJ/kg}}\left(\frac{1 \text{ ton}}{1000 \text{ kg}}\right) = 0.04174 \text{ tons/s} = \mathbf{150.3 \text{ tons/h}}$$

10–21 Consider a solar-pond power plant that operates on a simple ideal Rankine cycle with refrigerant-134a as the working fluid. The refrigerant enters the turbine as a saturated vapor at 1.4 MPa and leaves at 0.7 MPa. The mass flow rate of the refrigerant is 3 kg/s. Show the cycle on a *T-s* diagram with respect to saturation lines, and determine (*a*) the thermal efficiency of the cycle and (*b*) the power output of this plant.

10-21 A solar-pond power plant that operates on a simple ideal Rankine cycle with refrigerant-134a as the working fluid is considered. The thermal efficiency of the cycle and the power output of the plant are to be determined.

Assumptions **1** Steady operating conditions exist. **2** Kinetic and potential energy changes are negligible.

Analysis (*a*) From the refrigerant tables (Tables A-11, A-12, and A-13),

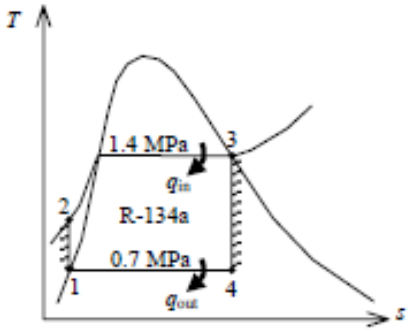

$$h_1 = h_{f@0.7\text{ MPa}} = 88.82 \text{ kJ/kg}$$

$$v_1 = v_{f@0.7\text{ MPa}} = 0.0008331 \text{ m}^3\text{/kg}$$

$$w_{p,\text{in}} = v_1(P_2 - P_1)$$

$$= (0.0008331 \text{ m}^3\text{/kg})(1400 - 700 \text{ kPa})\left(\frac{1 \text{ kJ}}{1 \text{ kPa}\cdot\text{m}^3}\right)$$

$$= 0.58 \text{ kJ/kg}$$

$$h_2 = h_1 + w_{p,\text{in}} = 88.82 + 0.58 = 89.40 \text{ kJ/kg}$$

$$\left.\begin{array}{l} P_3 = 1.4 \text{ MPa} \\ \text{sat.vapor} \end{array}\right\} \begin{array}{l} h_3 = h_{g@1.4\text{ MPa}} = 276.12 \text{ kJ/kg} \\ s_3 = s_{g@1.4\text{ MPa}} = 0.9105 \text{ kJ/kg}\cdot\text{K} \end{array}$$

$$\left.\begin{array}{l} P_4 = 0.7 \text{ MPa} \\ s_4 = s_3 \end{array}\right\} x_4 = \frac{s_4 - s_f}{s_{fg}} = \frac{0.9105 - 0.33230}{0.58763} = 0.9839$$

$$h_4 = h_f + x_4 h_{fg} = 88.82 + (0.9839)(176.21) = 262.20 \text{ kJ/kg}$$

Thus ,

$$q_{\text{in}} = h_3 - h_2 = 276.12 - 89.40 = 186.72 \text{ kJ/kg}$$

$$q_{\text{out}} = h_4 - h_1 = 262.20 - 88.82 = 173.38 \text{ kJ/kg}$$

$$w_{\text{net}} = q_{\text{in}} - q_{\text{out}} = 186.72 - 173.38 = 13.34 \text{ kJ/kg}$$

and

$$\eta_{\text{th}} = \frac{w_{\text{net}}}{q_{\text{in}}} = \frac{13.34 \text{ kJ/kg}}{186.72 \text{ kJ/kg}} = \mathbf{7.1\%}$$

(*b*) $$\dot{W}_{\text{net}} = \dot{m} w_{\text{net}} = (3 \text{ kg/s})(13.34 \text{ kJ/kg}) = \mathbf{40.02 \text{ kW}}$$

10–22 Consider a steam power plant that operates on a simple ideal Rankine cycle and has a net power output of 45 MW. Steam enters the turbine at 7 MPa and 500°C and is cooled in the condenser at a pressure of 10 kPa by running cooling water from a lake through the tubes of the condenser at a rate of 2000 kg/s. Show the cycle on a *T-s* diagram with respect to saturation lines, and determine (*a*) the thermal efficiency of the cycle, (*b*) the mass flow rate of the steam, and (*c*) the temperature rise of the cooling water. *Answers:* (*a*) 38.9 percent, (*b*) 36 kg/s, (*c*) 8.4°C

10-22 A steam power plant operates on a simple ideal Rankine cycle between the specified pressure limits. The thermal efficiency of the cycle, the mass flow rate of the steam, and the temperature rise of the cooling water are to be determined.

Assumptions **1** Steady operating conditions exist. **2** Kinetic and potential energy changes are negligible.

Analysis (*a*) From the steam tables (Tables A-4, A-5, and A-6),

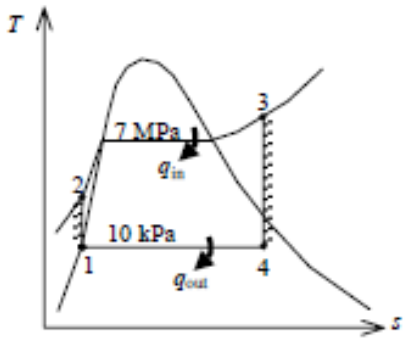

$$h_1 = h_{f@10\text{ kPa}} = 191.81 \text{ kJ/kg}$$

$$v_1 = v_{f@10\text{ kPa}} = 0.00101 \text{ m}^3/\text{kg}$$

$$w_{p,in} = v_1(P_2 - P_1)$$

$$= (0.00101 \text{ m}^3/\text{kg})(7{,}000 - 10 \text{ kPa})\left(\frac{1 \text{ kJ}}{1 \text{ kPa}\cdot\text{m}^3}\right)$$

$$= 7.06 \text{ kJ/kg}$$

$$h_2 = h_1 + w_{p,in} = 191.81 + 7.06 = 198.87 \text{ kJ/kg}$$

$$\left.\begin{array}{l} P_3 = 7 \text{ MPa} \\ T_3 = 500°\text{C} \end{array}\right\} \begin{array}{l} h_3 = 3411.4 \text{ kJ/kg} \\ s_3 = 6.8000 \text{ kJ/kg}\cdot\text{K} \end{array}$$

$$\left.\begin{array}{l} P_4 = 10 \text{ kPa} \\ s_4 = s_3 \end{array}\right\} x_4 = \frac{s_4 - s_f}{s_{fg}} = \frac{6.8000 - 0.6492}{7.4996} = 0.8201$$

$$h_4 = h_f + x_4 h_{fg} = 191.81 + (0.8201)(2392.1) = 2153.6 \text{ kJ/kg}$$

Thus,

$$q_{in} = h_3 - h_2 = 3411.4 - 198.87 = 3212.5 \text{ kJ/kg}$$

$$q_{out} = h_4 - h_1 = 2153.6 - 191.81 = 1961.8 \text{ kJ/kg}$$

$$w_{net} = q_{in} - q_{out} = 3212.5 - 1961.8 = 1250.7 \text{ kJ/kg}$$

and

$$\eta_{th} = \frac{w_{net}}{q_{in}} = \frac{1250.7 \text{ kJ/kg}}{3212.5 \text{ kJ/kg}} = 38.9\%$$

(*b*)

$$\dot{m} = \frac{\dot{W}_{net}}{w_{net}} = \frac{45{,}000 \text{ kJ/s}}{1250.7 \text{ kJ/kg}} = 36.0 \text{ kg/s}$$

(*c*) The rate of heat rejection to the cooling water and its temperature rise are

$$\dot{Q}_{out} = \dot{m} q_{out} = (35.98 \text{ kg/s})(1961.8 \text{ kJ/kg}) = 70{,}586 \text{ kJ/s}$$

$$\Delta T_{coolingwater} = \frac{\dot{Q}_{out}}{(\dot{m}c)_{coolingwater}} = \frac{70{,}586 \text{ kJ/s}}{(2000 \text{ kg/s})(4.18 \text{ kJ/kg}\cdot°\text{C})} = 8.4°\text{C}$$

10–23 Repeat Prob. 10–22 assuming an isentropic efficiency of 87 percent for both the turbine and the pump.
Answers: (*a*) 33.8 percent, (*b*) 41.4 kg/s, (*c*) 10.5°C

10-23 A steam power plant operates on a simple nonideal Rankine cycle between the specified pressure limits. The thermal efficiency of the cycle, the mass flow rate of the steam, and the temperature rise of the cooling water are to be determined.

Assumptions **1** Steady operating conditions exist. **2** Kinetic and potential energy changes are negligible.

Analysis (*a*) From the steam tables (Tables A-4, A-5, and A-6),

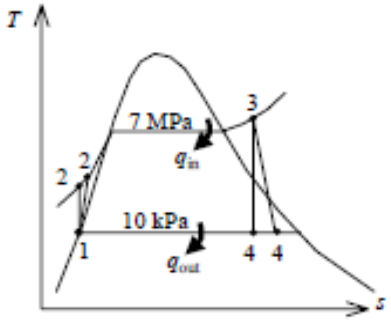

$$h_1 = h_{f@10\text{ kPa}} = 191.81 \text{ kJ/kg}$$

$$v_1 = v_{f@10\text{ kPa}} = 0.00101 \text{ m}^3/\text{kg}$$

$$w_{p,in} = v_1(P_2 - P_1)/\eta_p$$

$$= (0.00101 \text{ m}^3/\text{kg})(7{,}000 - 10 \text{ kPa})\left(\frac{1 \text{ kJ}}{1 \text{ kPa}\cdot\text{m}^3}\right)/(0.87)$$

$$= 8.11 \text{ kJ/kg}$$

$$h_2 = h_1 + w_{p,in} = 191.81 + 8.11 = 199.92 \text{ kJ/kg}$$

$$\left.\begin{array}{l} P_3 = 7 \text{ MPa} \\ T_3 = 500°\text{C} \end{array}\right\} \begin{array}{l} h_3 = 3411.4 \text{ kJ/kg} \\ s_3 = 6.8000 \text{ kJ/kg}\cdot\text{K} \end{array}$$

$$\left.\begin{array}{l} P_4 = 10 \text{ kPa} \\ s_4 = s_3 \end{array}\right\} x_4 = \frac{s_4 - s_f}{s_{fg}} = \frac{6.8000 - 0.6492}{7.4996} = 0.8201$$

$$h_{4s} = h_f + x_4 h_{fg} = 191.81 + (0.820)(2392.1) = 2153.6 \text{ kJ/kg}$$

$$\eta_T = \frac{h_3 - h_4}{h_3 - h_{4s}} \longrightarrow h_4 = h_3 - \eta_T(h_3 - h_{4s})$$

$$= 3411.4 - (0.87)(3411.4 - 2153.6) = 2317.1 \text{ kJ/kg}$$

Thus,

$$q_{in} = h_3 - h_2 = 3411.4 - 199.92 = 3211.5 \text{ kJ/kg}$$

$$q_{out} = h_4 - h_1 = 2317.1 - 191.81 = 2125.3 \text{ kJ/kg}$$

$$w_{net} = q_{in} - q_{out} = 3211.5 - 2125.3 = 1086.2 \text{ kJ/kg}$$

and

$$\eta_{th} = \frac{w_{net}}{q_{in}} = \frac{1086.2 \text{ kJ/kg}}{3211.5 \text{ kJ/kg}} = \mathbf{33.8\%}$$

(*b*)

$$\dot{m} = \frac{\dot{W}_{net}}{w_{net}} = \frac{45{,}000 \text{ kJ/s}}{1086.2 \text{ kJ/kg}} = \mathbf{41.43 \text{ kg/s}}$$

(*c*) The rate of heat rejection to the cooling water and its temperature rise are

$$\dot{Q}_{out} = \dot{m}q_{out} = (41.43 \text{ kg/s})(2125.3 \text{ kJ/kg}) = 88{,}051 \text{ kJ/s}$$

$$\Delta T_{coolingwater} = \frac{\dot{Q}_{out}}{(\dot{m}c)_{coolingwater}} = \frac{88{,}051 \text{ kJ/s}}{(2000 \text{ kg/s})(4.18 \text{ kJ/kg}\cdot°\text{C})} = \mathbf{10.5°C}$$

10–24 The net work output and the thermal efficiency for the Carnot and the simple ideal Rankine cycles with steam as the working fluid are to be calculated and compared. Steam enters the turbine in both cases at 10 MPa as a saturated vapor, and the condenser pressure is 20 kPa. In the Rankine cycle, the condenser exit state is saturated liquid and in the Carnot cycle, the boiler inlet state is saturated liquid. Draw the *T-s* diagrams for both cycles.

10-24 The net work outputs and the thermal efficiencies for a Carnot cycle and a simple ideal Rankine cycle are to be determined.

Assumptions **1** Steady operating conditions exist. **2** Kinetic and potential energy changes are negligible.

Analysis (*a*) Rankine cycle analysis: From the steam tables (Tables A-4, A-5, and A-6),

$$h_1 = h_{f@\,20\text{ kPa}} = 251.42 \text{ kJ/kg}$$

$$v_1 = v_{f@\,20\text{ kPa}} = 0.001017 \text{ m}^3/\text{kg}$$

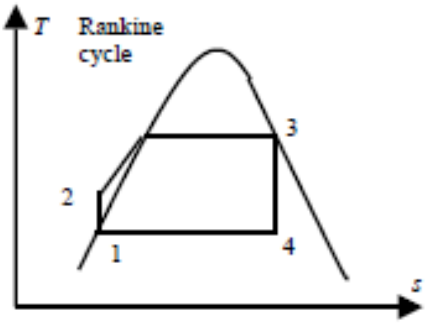

$$w_{p,\text{in}} = v_1(P_2 - P_1)$$
$$= (0.001017 \text{ m}^3/\text{kg})(10{,}000 - 20)\text{kPa}\left(\frac{1 \text{ kJ}}{1 \text{ kPa}\cdot\text{m}^3}\right)$$
$$= 10.15 \text{ kJ/kg}$$

$$h_2 = h_1 + w_{p,\text{in}} = 251.42 + 10.15 = 261.57 \text{ kJ/kg}$$

$$\left.\begin{array}{l} P_3 = 10 \text{ MPa} \\ x_3 = 1 \end{array}\right\} \begin{array}{l} h_3 = 2725.5 \text{ kJ/kg} \\ s_3 = 5.6159 \text{ kJ/kg}\cdot\text{K} \end{array}$$

$$\left.\begin{array}{l} P_4 = 20 \text{ kPa} \\ s_4 = s_3 \end{array}\right\} x_4 = \frac{s_4 - s_f}{s_{fg}} = \frac{5.6159 - 0.8320}{7.0752} = 0.6761$$

$$h_4 = h_f + x_4 h_{fg} = 251.42 + (0.6761)(2357.5)$$
$$= 1845.3 \text{ kJ/kg}$$

$$q_{\text{in}} = h_3 - h_2 = 2725.5 - 261.57 = 2463.9 \text{ kJ/kg}$$
$$q_{\text{out}} = h_4 - h_1 = 1845.3 - 251.42 = 1594.0 \text{ kJ/kg}$$
$$w_{\text{net}} = q_{\text{in}} - q_{\text{out}} = 2463.9 - 1594.0 = \mathbf{869.9 \text{ kJ/kg}}$$

$$\eta_{\text{th}} = 1 - \frac{q_{\text{out}}}{q_{\text{in}}} = 1 - \frac{1594.0}{2463.9} = \mathbf{0.353}$$

(*b*) Carnot Cycle analysis:

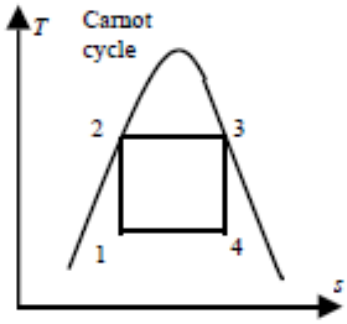

$$\left.\begin{array}{l} P_3 = 10 \text{ MPa} \\ x_3 = 1 \end{array}\right\} \begin{array}{l} h_3 = 2725.5 \text{ kJ/kg} \\ T_3 = 311.0\,°\text{C} \end{array}$$

$$\left.\begin{array}{l} T_2 = T_3 = 311.0\,°\text{C} \\ x_2 = 0 \end{array}\right\} \begin{array}{l} h_2 = 1407.8 \text{ kJ/kg} \\ s_2 = 3.3603 \text{ kJ/kg}\cdot\text{K} \end{array}$$

$$\left.\begin{array}{l} P_1 = 20 \text{ kPa} \\ s_1 = s_2 \end{array}\right\} \begin{array}{l} x_1 = \dfrac{s_1 - s_f}{s_{fg}} = \dfrac{3.3603 - 0.8320}{7.0752} = 0.3574 \\ h_1 = h_f + x_1 h_{fg} \end{array}$$

$$= 251.42 + (0.3574)(2357.5) = 1093.9 \text{ kJ/kg}$$

$$q_{\text{in}} = h_3 - h_2 = 2725.5 - 1407.8 = 1317.7 \text{ kJ/kg}$$
$$q_{\text{out}} = h_4 - h_1 = 1845.3 - 1093.9 = 751.4 \text{ kJ/kg}$$
$$w_{\text{net}} = q_{\text{in}} - q_{\text{out}} = 1317.7 - 752.3 = \mathbf{565.4 \text{ kJ/kg}}$$

$$\eta_{\text{th}} = 1 - \frac{q_{\text{out}}}{q_{\text{in}}} = 1 - \frac{751.4}{1317.7} = \mathbf{0.430}$$

10–25 A binary geothermal power plant uses geothermal water at 160°C as the heat source. The cycle operates on the simple Rankine cycle with isobutane as the working fluid. Heat is transferred to the cycle by a heat exchanger in which geothermal liquid water enters at 160°C at a rate of 555.9 kg/s and leaves at 90°C. Isobutane enters the turbine at 3.25 MPa and 147°C at a rate of 305.6 kg/s, and leaves at 79.5°C and 410 kPa. Isobutane is condensed in an air-cooled condenser and pumped to the heat exchanger pressure. Assuming the pump to have an isentropic efficiency of 90 percent, determine (*a*) the isentropic efficiency of the turbine, (*b*) the net power output of the plant, and (*c*) the thermal efficiency of the cycle.

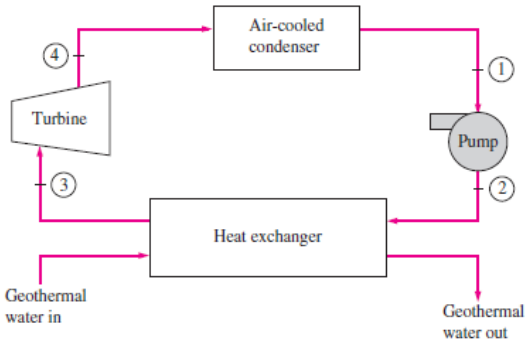

10-25 A binary geothermal power operates on the simple Rankine cycle with isobutane as the working fluid. The isentropic efficiency of the turbine, the net power output, and the thermal efficiency of the cycle are to be determined.

Assumptions **1** Steady operating conditions exist. **2** Kinetic and potential energy changes are negligible.

Properties The specific heat of geothermal water is taken to be 4.18 kJ/kg.°C.

Analysis (*a*) We need properties of isobutane, which are not available in the book. However, we can obtain the properties from EES.

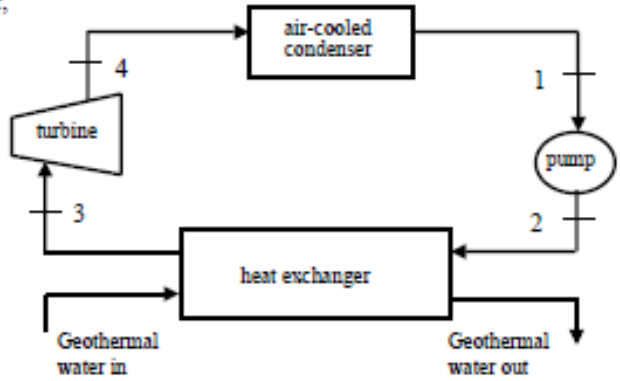

Turbine:

$$\left.\begin{array}{l} P_3 = 3250\text{ kPa} \\ T_3 = 147°\text{C} \end{array}\right\} \begin{array}{l} h_3 = 761.54\text{ kJ/kg} \\ s_3 = 2.5457\text{ kJ/kg}\cdot\text{K} \end{array}$$

$$\left.\begin{array}{l} P_4 = 410\text{ kPa} \\ s_4 = s_3 \end{array}\right\} h_{4s} = 670.40\text{ kJ/kg}$$

$$\left.\begin{array}{l} P_4 = 410\text{ kPa} \\ T_4 = 179.5°\text{C} \end{array}\right\} h_4 = 689.74\text{ kJ/kg}$$

$$\eta_T = \frac{h_3 - h_4}{h_3 - h_{4s}} = \frac{761.54 - 689.74}{761.54 - 670.40} = \mathbf{0.788}$$

(*b*) Pump:

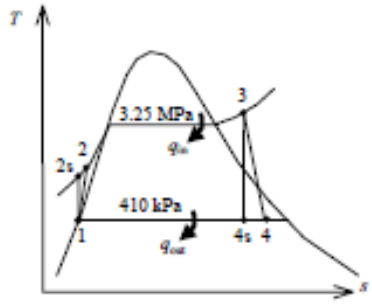

$$h_1 = h_{f@\,410\text{ kPa}} = 273.01\text{ kJ/kg}$$

$$v_1 = v_{f@\,410\text{ kPa}} = 0.001842\text{ m}^3/\text{kg}$$

$$\begin{aligned} w_{p,\text{in}} &= v_1(P_2 - P_1)/\eta_P \\ &= (0.001842\text{ m}^3/\text{kg})(3250 - 410)\text{kPa}\left(\frac{1\text{ kJ}}{1\text{ kPa}\cdot\text{m}^3}\right)/0.90 \\ &= 5.81\text{ kJ/kg} \end{aligned}$$

$$h_2 = h_1 + w_{p,\text{in}} = 273.01 + 5.81 = 278.82\text{ kJ/kg}$$

$$\dot{W}_{\text{T,out}} = \dot{m}(h_3 - h_4) = (305.6\text{ kJ/kg})(761.54 - 689.74)\text{kJ/kg} = 21{,}941\text{ kW}$$

$$\dot{W}_{\text{P,in}} = \dot{m}(h_2 - h_1) = \dot{m}w_{\text{p,in}} = (305.6\text{ kJ/kg})(5.81\text{ kJ/kg}) = 1777\text{ kW}$$

$$\dot{W}_{\text{net}} = \dot{W}_{\text{T,out}} - \dot{W}_{\text{P,in}} = 21{,}941 - 1777 = \mathbf{20{,}165\text{ kW}}$$

Heat Exchanger:

$$\dot{Q}_{\text{in}} = \dot{m}_{\text{geo}}c_{\text{geo}}(T_{\text{in}} - T_{\text{out}}) = (555.9\text{ kJ/kg})(4.18\text{ kJ/kg.°C})(160 - 90)°\text{C} = 162{,}656\text{ kW}$$

(*c*) $$\eta_{\text{th}} = \frac{\dot{W}_{\text{net}}}{\dot{Q}_{\text{in}}} = \frac{20{,}165}{162{,}656} = \mathbf{0.124 = 12.4\%}$$

10–26 The schematic of a single-flash geothermal power plant with state numbers is given in Fig. P10–26. Geothermal resource exists as saturated liquid at 230°C. The geothermal liquid is withdrawn from the production well at a rate of 230 kg/s, and is flashed to a pressure of 500 kPa by an essentially isenthalpic flashing process where the resulting vapor is separated from the liquid in a separator and directed to the turbine. The steam leaves the turbine at 10 kPa with a moisture content of 10 percent and enters the condenser where it is condensed and routed to a reinjection well along with the liquid coming off the separator. Determine (*a*) the mass flow rate of steam through the turbine, (*b*) the isentropic efficiency of the turbine, (*c*) the power output of the turbine, and (*d*) the thermal efficiency of the plant (the ratio of the turbine work output to the energy of the geothermal fluid relative to standard ambient conditions). *Answers:* (*a*) 38.2 kg/s, (*b*) 0.686, (*c*) 15.4 MW, (*d*) 7.6 percent

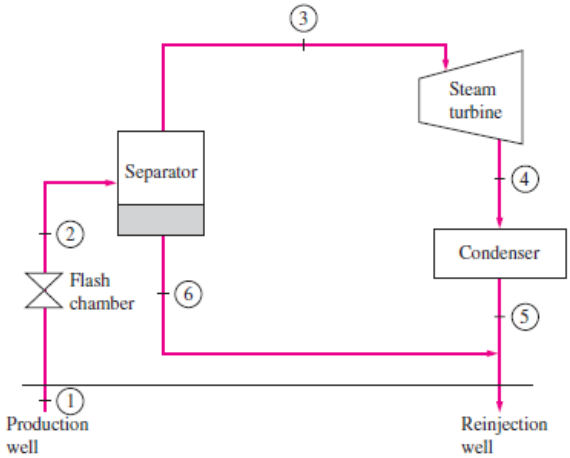

10-26 A single-flash geothermal power plant uses hot geothermal water at 230°C as the heat source. The mass flow rate of steam through the turbine, the isentropic efficiency of the turbine, the power output from the turbine, and the thermal efficiency of the plant are to be determined.

Assumptions **1** Steady operating conditions exist. **2** Kinetic and potential energy changes are negligible.

Analysis (*a*) We use properties of water for geothermal water (Tables A-4 through A-6)

$$\left.\begin{array}{l} T_1 = 230°\text{C} \\ x_1 = 0 \end{array}\right\} h_1 = 990.14 \text{ kJ/kg}$$

$$\left.\begin{array}{l} P_2 = 500 \text{ kPa} \\ h_2 = h_1 = 990.14 \text{ kJ/kg} \end{array}\right\} x_2 = \frac{h_2 - h_f}{h_{fg}} = \frac{990.14 - 640.09}{2108} = 0.1661$$

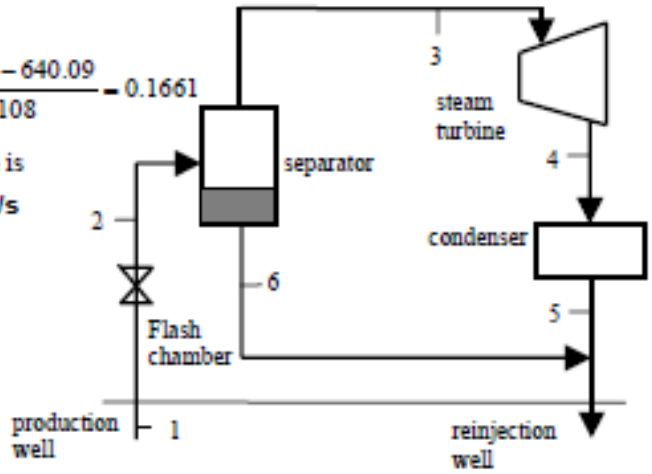

The mass flow rate of steam through the turbine is

$$\dot{m}_3 = x_2 \dot{m}_1 = (0.1661)(230 \text{ kg/s}) = \mathbf{38.20 \text{ kg/s}}$$

(*b*) Turbine:

$$\left.\begin{array}{l} P_3 = 500 \text{ kPa} \\ x_3 = 1 \end{array}\right\} \begin{array}{l} h_3 = 2748.1 \text{ kJ/kg} \\ s_3 = 6.8207 \text{ kJ/kg·K} \end{array}$$

$$\left.\begin{array}{l} P_4 = 10 \text{ kPa} \\ s_4 = s_3 \end{array}\right\} h_{4s} = 2160.3 \text{ kJ/kg}$$

$$\left.\begin{array}{l} P_4 = 10 \text{ kPa} \\ x_4 = 0.90 \end{array}\right\} h_4 = h_f + x_4 h_{fg} = 191.81 + (0.90)(2392.1) = 2344.7 \text{ kJ/kg}$$

$$\eta_T = \frac{h_3 - h_4}{h_3 - h_{4s}} = \frac{2748.1 - 2344.7}{2748.1 - 2160.3} = \mathbf{0.686}$$

(*c*) The power output from the turbine is

$$\dot{W}_{T,out} = \dot{m}_3 (h_3 - h_4) = (38.20 \text{ kJ/kg})(2748.1 - 2344.7)\text{kJ/kg} = \mathbf{15{,}410 \text{ kW}}$$

(*d*) We use saturated liquid state at the standard temperature for dead state enthalpy

$$\left.\begin{array}{l} T_0 = 25°\text{C} \\ x_0 = 0 \end{array}\right\} h_0 = 104.83 \text{ kJ/kg}$$

$$\dot{E}_{in} = \dot{m}_1 (h_1 - h_0) = (230 \text{ kJ/kg})(990.14 - 104.83)\text{kJ/kg} = 203{,}622 \text{ kW}$$

$$\eta_{th} = \frac{\dot{W}_{T,out}}{\dot{E}_{in}} = \frac{15{,}410}{203{,}622} = 0.0757 = \mathbf{7.6\%}$$