## Question 1

**1–42** The water in a tank is pressurized by air, and the pressure is measured by a multifluid manometer as shown in Fig. P1–42. Determine the gage pressure of air in the tank if

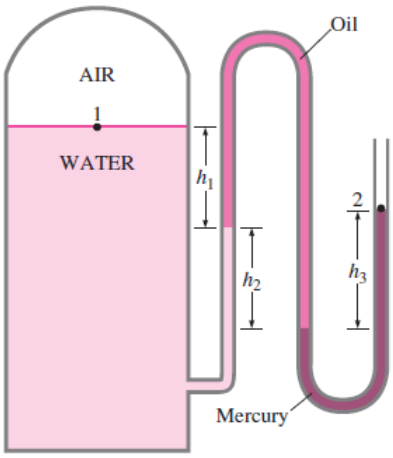


## Solution

**1-42** The pressure in a pressurized water tank is measured by a multi-fluid manometer. The gage pressure of air in the tank is to be determined.

***Assumptions*** The air pressure in the tank is uniform (i.e., its variation with elevation is negligible due to its low density), and thus we can determine the pressure at the air-water interface.

***Properties*** The densities of mercury, water, and oil are given to be 13,600, 1000, and 850 kg/m$^3$, respectively.

***Analysis*** Starting with the pressure at point 1 at the air-water interface, and moving along the tube by adding (as we go down) or subtracting (as we go up) the $\rho gh$ terms until we reach point 2, and setting the result equal to $P_{atm}$ since the tube is open to the atmosphere gives

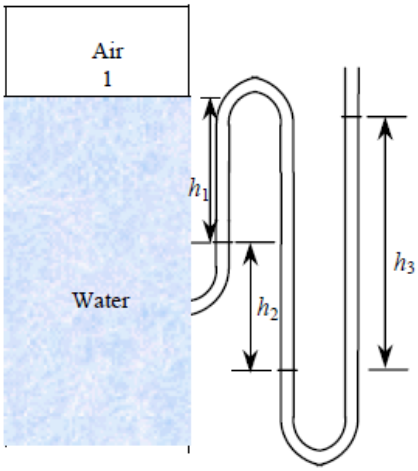


$$P_1 + \rho_{water} g h_1 + \rho_{oil} g h_2 - \rho_{mercury} g h_3 = P_{atm}$$

Solving for $P_1$,

$$P_1 = P_{atm} - \rho_{water} g h_1 - \rho_{oil} g h_2 + \rho_{mercury} g h_3$$

or,

$$P_1 - P_{atm} = g(\rho_{mercury} h_3 - \rho_{water} h_1 - \rho_{oil} h_2)$$

Noting that $P_{1,gage} = P_1 - P_{atm}$ and substituting,

$$P_{1,gage} = (9.81\ \text{m/s}^2)[(13{,}600\ \text{kg/m}^3)(0.46\ \text{m}) - (1000\ \text{kg/m}^3)(0.2\ \text{m}) - (850\ \text{kg/m}^3)(0.3\ \text{m})]\left(\frac{1\ \text{N}}{1\ \text{kg}\cdot\text{m/s}^2}\right)\left(\frac{1\ \text{kPa}}{1000\ \text{N/m}^2}\right)$$

$$= \mathbf{56.9\ kPa}$$

***Discussion*** Note that jumping horizontally from one tube to the next and realizing that pressure remains the same in the same fluid simplifies the analysis greatly.

**Question 2**

**1–48** Consider a 70-kg woman who has a total foot imprint area of 400 $cm^2$. She wishes to walk on the snow, but the snow cannot withstand pressures greater than 0.5 kPa. Determine the minimum size of the snowshoes needed (imprint area per shoe) to enable her to walk on the snow without sinking.

**Solution**

**1-48** The mass of a woman is given. The minimum imprint area per shoe needed to enable her to walk on the snow without sinking is to be determined.

***Assumptions*** **1** The weight of the person is distributed uniformly on the imprint area of the shoes. **2** One foot carries the entire weight of a person during walking, and the shoe is sized for walking conditions (rather than standing). **3** The weight of the shoes is negligible.

***Analysis*** The mass of the woman is given to be 70 kg. For a pressure of 0.5 kPa on the snow, the imprint area of one shoe must be

$$A = \frac{W}{P} = \frac{mg}{P} = \frac{(70\text{ kg})(9.81\text{ m/s}^2)}{0.5\text{ kPa}}\left(\frac{1\text{ N}}{1\text{ kg}\cdot\text{m/s}^2}\right)\left(\frac{1\text{ kPa}}{1000\text{ N/m}^2}\right) = \mathbf{1.37\ m^2}$$

***Discussion*** This is a very large area for a shoe, and such shoes would be impractical to use. Therefore, some sinking of the snow should be allowed to have shoes of reasonable size.

**Question 3**

**1–52** The barometer of a mountain hiker reads 930 mbars at the beginning of a hiking trip and 780 mbars at the end. Neglecting the effect of altitude on local gravitational acceleration, determine the vertical distance climbed. Assume an average air density of 1.20 $kg/m^3$.

**Solution**

**1-52** A mountain hiker records the barometric reading before and after a hiking trip. The vertical distance climbed is to be determined.

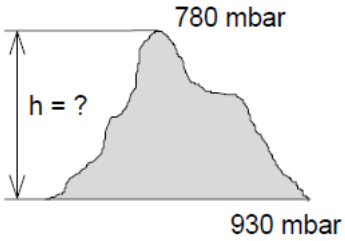


***Assumptions*** The variation of air density and the gravitational acceleration with altitude is negligible.

***Properties*** The density of air is given to be $\rho = 1.20\ \text{kg/m}^3$.

***Analysis*** Taking an air column between the top and the bottom of the mountain and writing a force balance per unit base area, we obtain

$$W_{\text{air}} / A = P_{\text{bottom}} - P_{\text{top}}$$

$$(\rho g h)_{\text{air}} = P_{\text{bottom}} - P_{\text{top}}$$

$$(1.20\ \text{kg/m}^3)(9.81\ \text{m/s}^2)(h)\left(\frac{1\ \text{N}}{1\ \text{kg}\cdot\text{m/s}^2}\right)\left(\frac{1\ \text{bar}}{100{,}000\ \text{N/m}^2}\right) = (0.930 - 0.780)\ \text{bar}$$

It yields $h =$ **1274 m**

which is also the distance climbed.

**Question 4**

**1–53** The basic barometer can be used to measure the height of a building. If the barometric readings at the top and at the bottom of a building are 730 and 755 mm Hg, respectively, determine the height of the building. Take the densities of air and mercury to be 1.18 kg/m$^3$ and 13,600 kg/m$^3$, respectively.

## Solution

**1-53** A barometer is used to measure the height of a building by recording reading at the bottom and at the top of the building. The height of the building is to be determined.

***Assumptions*** The variation of air density with altitude is negligible.

***Properties*** The density of air is given to be ρ = 1.18 kg/m$^3$. The density of mercury is 13,600 kg/m$^3$.

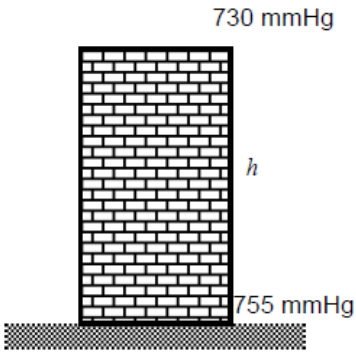


***Analysis*** Atmospheric pressures at the top and at the bottom of the building are

$$P_{top} = (\rho g h)_{top}$$
$$= (13{,}600\ \text{kg/m}^3)(9.807\ \text{m/s}^2)(0.730\ \text{m})\left(\frac{1\ \text{N}}{1\ \text{kg}\cdot\text{m/s}^2}\right)\left(\frac{1\ \text{kPa}}{1000\ \text{N/m}^2}\right)$$
$$= 97.36\ \text{kPa}$$

$$P_{bottom} = (\rho g h)_{bottom}$$
$$= (13{,}600\ \text{kg/m}^3)(9.807\ \text{m/s}^2)(0.755\ \text{m})\left(\frac{1\text{N}}{1\text{kg}\cdot\text{m/s}^2}\right)\left(\frac{1\ \text{kPa}}{1000\ \text{N/m}^2}\right)$$
$$= 100.70\ \text{kPa}$$

Taking an air column between the top and the bottom of the building and writing a force balance per unit base area, we obtain

$$W_{air} / A = P_{bottom} - P_{top}$$
$$(\rho g h)_{air} = P_{bottom} - P_{top}$$
$$(1.18\ \text{kg/m}^3)(9.807\ \text{m/s}^2)(h)\left(\frac{1\ \text{N}}{1\ \text{kg}\cdot\text{m/s}^2}\right)\left(\frac{1\ \text{kPa}}{1000\ \text{N/m}^2}\right) = (100.70 - 97.36)\ \text{kPa}$$

It yields $h$ = **288.6 m**

which is also the height of the building.

## Question 5

**1–57** A gas is contained in a vertical, frictionless piston–cylinder device. The piston has a mass of 4 kg and a cross-sectional area of 35 cm$^2$. A compressed spring above the piston exerts a force of 60 N on the piston. If the atmospheric pressure is 95 kPa, determine the pressure inside the cylinder.

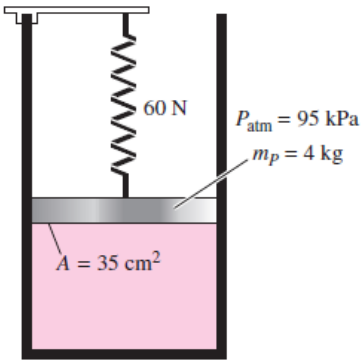

## Solution

**1-57** A gas contained in a vertical piston-cylinder device is pressurized by a spring and by the weight of the piston. The pressure of the gas is to be determined.

***Analysis*** Drawing the free body diagram of the piston and balancing the vertical forces yield

$$PA = P_{atm}A + W + F_{spring}$$

Thus,

$$P = P_{atm} + \frac{mg + F_{spring}}{A}$$

$$= (95\text{ kPa}) + \frac{(4\text{ kg})(9.81\text{ m/s}^2) + 60\text{ N}}{35\times10^{-4}\text{ m}^2}\left(\frac{1\text{ kPa}}{1000\text{ N/m}^2}\right)$$

$$= \mathbf{123.4\ kPa}$$

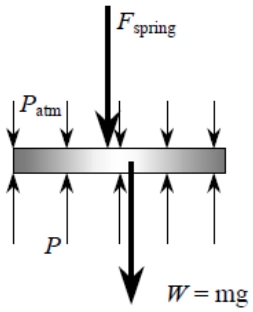


## Question 6

**1–65** The maximum blood pressure in the upper arm of a healthy person is about 120 mm Hg. If a vertical tube open to the atmosphere is connected to the vein in the arm of the person, determine how high the blood will rise in the tube. Take the density of the blood to be 1050 kg/m$^3$.

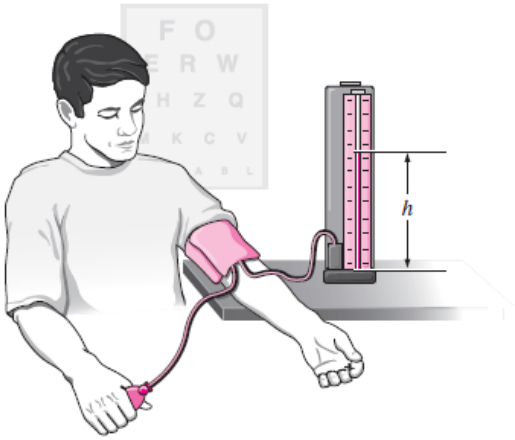

## Solution

**1-65** A vertical tube open to the atmosphere is connected to the vein in the arm of a person. The height that the blood will rise in the tube is to be determined.

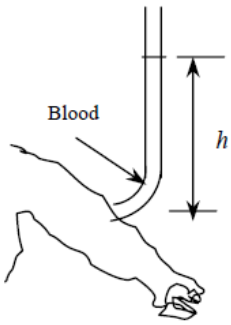


***Assumptions*** **1** The density of blood is constant. **2** The gage pressure of blood is 120 mmHg.

***Properties*** The density of blood is given to be $\rho = 1050\ \text{kg/m}^3$.

***Analysis*** For a given gage pressure, the relation $P = \rho g h$ can be expressed for mercury and blood as $P = \rho_{\text{blood}} g h_{\text{blood}}$ and $P = \rho_{\text{mercury}} g h_{\text{mercury}}$. Setting these two relations equal to each other we get

$$P = \rho_{\text{blood}} g h_{\text{blood}} = \rho_{\text{mercury}} g h_{\text{mercury}}$$

Solving for blood height and substituting gives

$$h_{\text{blood}} = \frac{\rho_{\text{mercury}}}{\rho_{\text{blood}}} h_{\text{mercury}} = \frac{13{,}600\ \text{kg/m}^3}{1050\ \text{kg/m}^3}(0.12\ \text{m}) = \mathbf{1.55\ m}$$

***Discussion*** Note that the blood can rise about one and a half meters in a tube connected to the vein. This explains why IV tubes must be placed high to force a fluid into the vein of a patient.

## Question 7

**1–69** Freshwater and seawater flowing in parallel horizontal pipelines are connected to each other by a double U-tube manometer, as shown in Fig. P1–69. Determine the pressure difference between the two pipelines. Take the density of seawater at that location to be $\rho = 1035\ \text{kg/m}^3$. Can the air column be ignored in the analysis?

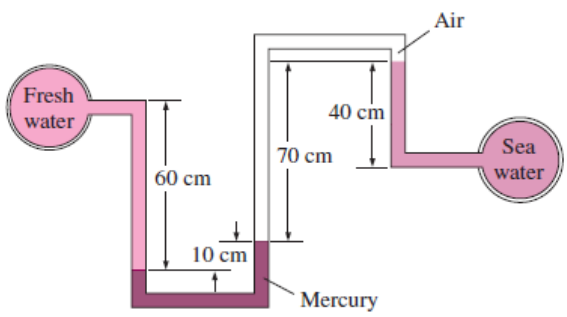

## Solution

**1-69** Fresh and seawater flowing in parallel horizontal pipelines are connected to each other by a double U-tube manometer. The pressure difference between the two pipelines is to be determined.

***Assumptions*** **1** All the liquids are incompressible. **2** The effect of air column on pressure is negligible.

***Properties*** The densities of seawater and mercury are given to be $\rho_{sea}$ = 1035 kg/m$^3$ and $\rho_{Hg}$ = 13,600 kg/m$^3$. We take the density of water to be $\rho_w$ =1000 kg/m$^3$.

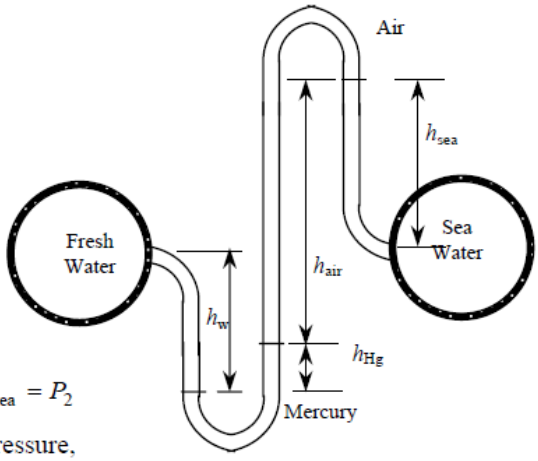


***Analysis*** Starting with the pressure in the fresh water pipe (point 1) and moving along the tube by adding (as we go down) or subtracting (as we go up) the $\rho gh$ terms until we reach the sea water pipe (point 2), and setting the result equal to $P_2$ gives

$$P_1 + \rho_w g h_w - \rho_{Hg} g h_{Hg} - \rho_{air} g h_{air} + \rho_{sea} g h_{sea} = P_2$$

Rearranging and neglecting the effect of air column on pressure,

$$P_1 - P_2 = -\rho_w g h_w + \rho_{Hg} g h_{Hg} - \rho_{sea} g h_{sea} = g(\rho_{Hg} h_{Hg} - \rho_w h_w - \rho_{sea} h_{sea})$$

Substituting,

$$P_1 - P_2 = (9.81\,\text{m/s}^2)[(13600\,\text{kg/m}^3)(0.1\,\text{m}) - (1000\,\text{kg/m}^3)(0.6\,\text{m}) - (1035\,\text{kg/m}^3)(0.4\,\text{m})]\left(\frac{1\,\text{kN}}{1000\,\text{kg}\cdot\text{m/s}^2}\right)$$

$$= 3.39\,\text{kN/m}^2 = \mathbf{3.39\ kPa}$$

Therefore, the pressure in the fresh water pipe is 3.39 kPa higher than the pressure in the sea water pipe.

***Discussion*** A 0.70-m high air column with a density of 1.2 kg/m$^3$ corresponds to a pressure difference of 0.008 kPa. Therefore, its effect on the pressure difference between the two pipes is negligible.

## Question 8

**1–78** A multifluid container is connected to a U-tube, as shown in Fig. P1–78. For the given specific gravities and fluid column heights, determine the gage pressure at *A*. Also determine the height of a mercury column that would create the same pressure at *A*. *Answers:* 0.471 kPa, 0.353 cm

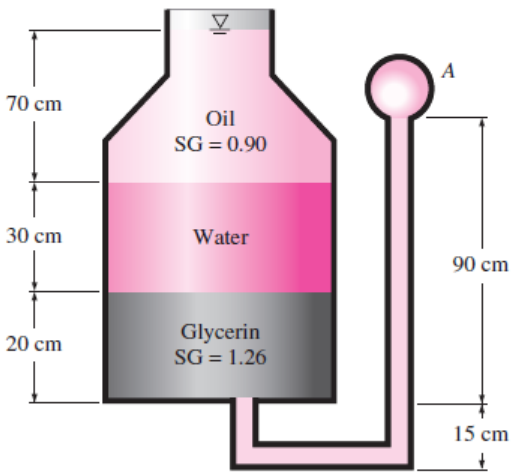

**Solution**

**1-78** A multi-fluid container is connected to a U-tube. For the given specific gravities and fluid column heights, the gage pressure at A and the height of a mercury column that would create the same pressure at A are to be determined.

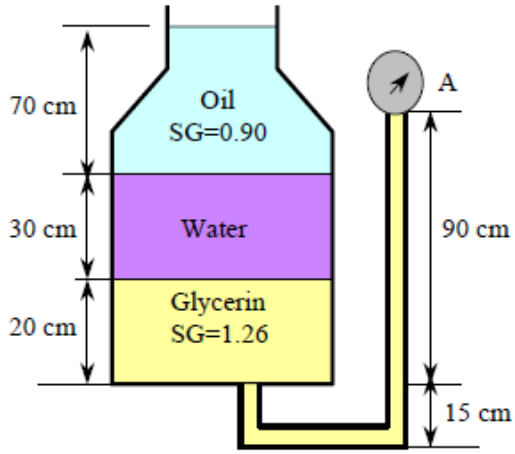


***Assumptions*** **1** All the liquids are incompressible. **2** The multi-fluid container is open to the atmosphere.

***Properties*** The specific gravities are given to be 1.26 for glycerin and 0.90 for oil. We take the standard density of water to be $\rho_w$ =1000 kg/m$^3$, and the specific gravity of mercury to be 13.6.

***Analysis*** Starting with the atmospheric pressure on the top surface of the container and moving along the tube by adding (as we go down) or subtracting (as we go up) the $\rho gh$ terms until we reach point $A$, and setting the result equal to $P_A$ give

$$P_{atm} + \rho_{oil} g h_{oil} + \rho_w g h_w - \rho_{gly} g h_{gly} = P_A$$

Rearranging and using the definition of specific gravity,

$$P_A - P_{atm} = SG_{oil}\rho_w g h_{oil} + SG_w \rho_w g h_w - SG_{gly}\rho_w g h_{gly}$$

or

$$P_{A,gage} = g\rho_w (SG_{oil} h_{oil} + SG_w h_w - SG_{gly} h_{gly})$$

Substituting,

$$P_{A,gage} = (9.81\,\text{m/s}^2)(1000\,\text{kg/m}^3)[0.90(0.70\,\text{m}) + 1(0.3\,\text{m}) - 1.26(0.70\,\text{m})]\left(\frac{1\,\text{kN}}{1000\,\text{kg}\cdot\text{m/s}^2}\right)$$

$$= 0.471\,\text{kN/m}^2 = \mathbf{0.471\,kPa}$$

The equivalent mercury column height is

$$h_{Hg} = \frac{P_{A,gage}}{\rho_{Hg} g} = \frac{0.471\,\text{kN/m}^2}{(13.6)(1000\,\text{kg/m}^3)(9.81\,\text{m/s}^2)}\left(\frac{1000\,\text{kg}\cdot\text{m/s}^2}{1\,\text{kN}}\right) = 0.00353\,\text{m} = \mathbf{0.353\ cm}$$

***Discussion*** Note that the high density of mercury makes it a very suitable fluid for measuring high pressures in manometers.

## Question 9

**1–85** A hydraulic lift is to be used to lift a 2500 kg weight by putting a weight of 25 kg on a piston with a diameter of 10 cm. Determine the diameter of the piston on which the weight is to be placed.

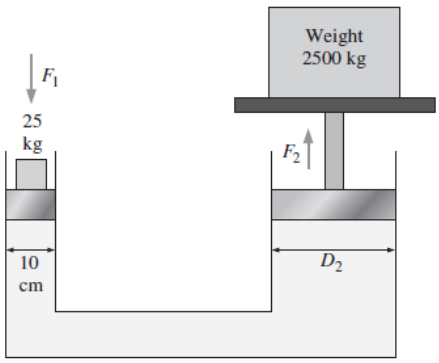


## Solution

**1-85** A hydraulic lift is used to lift a weight. The diameter of the piston on which the weight to be placed is to be determined.

***Assumptions*** **1** The cylinders of the lift are vertical. **2** There are no leaks. **3** Atmospheric pressure act on both sides, and thus it can be disregarded.

***Analysis*** Noting that pressure is force per unit area, the pressure on the smaller piston is determined from

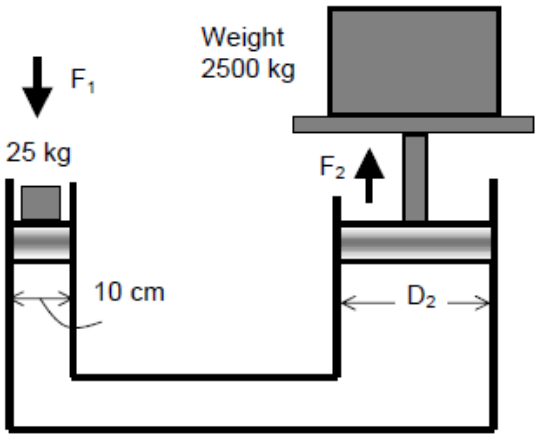


$$P_1 = \frac{F_1}{A_1} = \frac{m_1 g}{\pi D_1^2/4}$$

$$= \frac{(25\text{ kg})(9.81\text{ m/s}^2)}{\pi(0.10\text{ m})^2/4}\left(\frac{1\text{ kN}}{1000\text{ kg}\cdot\text{m/s}^2}\right)$$

$$= 31.23\text{ kN/m}^2 = 31.23\text{ kPa}$$

From Pascal's principle, the pressure on the greater piston is equal to that in the smaller piston. Then, the needed diameter is determined from

$$P_1 = P_2 = \frac{F_2}{A_2} = \frac{m_2 g}{\pi D_2^2/4} \longrightarrow 31.23\text{ kN/m}^2 = \frac{(2500\text{ kg})(9.81\text{ m/s}^2)}{\pi D_2^2/4}\left(\frac{1\text{ kN}}{1000\text{ kg}\cdot\text{m/s}^2}\right) \longrightarrow D_2 = \mathbf{1.0\ m}$$

***Discussion*** Note that large weights can be raised by little effort in hydraulic lift by making use of Pascal's principle.

## Question 10

**1–101** Balloons are often filled with helium gas because it weighs only about one-seventh of what air weighs under identical conditions. The buoyancy force, which can be expressed as $F_b = \rho_{air} g V_{balloon}$, will push the balloon upward. If the balloon has a diameter of 10 m and carries two people, 70 kg each, determine the acceleration of the balloon when it is first released. Assume the density of air is $\rho = 1.16$ kg/m$^3$, and neglect the weight of the ropes and the cage. *Answer:* 16.5 m/s$^2$

## Solution

**1-101** A helium balloon tied to the ground carries 2 people. The acceleration of the balloon when it is first released is to be determined.

***Assumptions*** The weight of the cage and the ropes of the balloon is negligible.

***Properties*** The density of air is given to be ρ = 1.16 kg/m$^3$. The density of helium gas is 1/7$^{th}$ of this.

***Analysis*** The buoyancy force acting on the balloon is

$$V_{balloon} = 4\pi r^3/3 = 4\pi(5\text{ m})^3/3 = 523.6\text{ m}^3$$

$$F_B = \rho_{air} g V_{balloon}$$
$$= (1.16\text{ kg/m}^3)(9.81\text{m/s}^2)(523.6\text{ m}^3)\left(\frac{1\text{ N}}{1\text{ kg}\cdot\text{m/s}^2}\right) = 5958\text{ N}$$

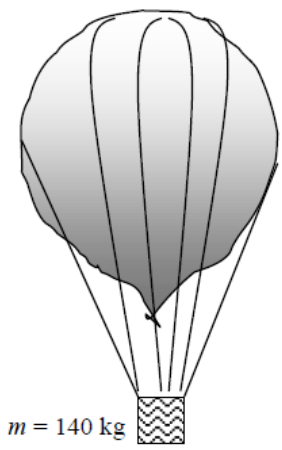


The total mass is

$$m_{He} = \rho_{He} V = \left(\frac{1.16}{7}\text{kg/m}^3\right)(523.6\text{ m}^3) = 86.8\text{ kg}$$

$$m_{total} = m_{He} + m_{people} = 86.8 + 2\times 70 = 226.8\text{ kg}$$

The total weight is

$$W = m_{total} g = (226.8\text{ kg})(9.81\text{ m/s}^2)\left(\frac{1\text{ N}}{1\text{ kg}\cdot\text{m/s}^2}\right) = 2225\text{ N}$$

Thus the net force acting on the balloon is

$$F_{net} = F_B - W = 5958 - 2225 = 3733\text{ N}$$

Then the acceleration becomes

$$a = \frac{F_{net}}{m_{total}} = \frac{3733\text{ N}}{226.8\text{ kg}}\left(\frac{1\text{kg}\cdot\text{m/s}^2}{1\text{ N}}\right) = \mathbf{16.5\ m/s^2}$$

## Question 11

**1–108** A pressure cooker cooks a lot faster than an ordinary pan by maintaining a higher pressure and temperature inside. The lid of a pressure cooker is well sealed, and steam can escape only through an opening in the middle of the lid. A separate metal piece, the petcock, sits on top of this opening and prevents steam from escaping until the pressure force overcomes the weight of the petcock. The periodic escape of the steam in this manner prevents any potentially dangerous pressure buildup and keeps the pressure inside at a constant value. Determine the mass of the petcock of a pressure cooker whose operation pressure is 100 kPa gage and has an opening cross-sectional area of 4 mm$^2$. Assume an atmospheric pressure of 101 kPa, and draw the free-body diagram of the petcock. *Answer:* 40.8 g

## Solution

**1-108** The gage pressure in a pressure cooker is maintained constant at 100 kPa by a petcock. The mass of the petcock is to be determined.

***Assumptions*** There is no blockage of the pressure release valve.

***Analysis*** Atmospheric pressure is acting on all surfaces of the petcock, which balances itself out. Therefore, it can be disregarded in calculations if we use the gage pressure as the cooker pressure. A force balance on the petcock ($\Sigma F_y = 0$) yields

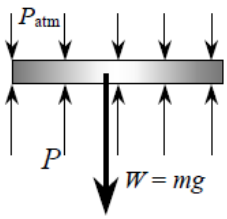


$$W = P_{gage} A$$

$$m = \frac{P_{gage} A}{g} = \frac{(100\text{ kPa})(4\times10^{-6}\text{ m}^2)}{9.81\text{ m/s}^2}\left(\frac{1000\text{ kg/m}\cdot\text{s}^2}{1\text{ kPa}}\right)$$

$$= \mathbf{0.0408\ kg}$$

## Question 12

**1–114** A gasoline line is connected to a pressure gage through a double-U manometer, as shown in Fig. P1–114. If the reading of the pressure gage is 370 kPa, determine the gage pressure of the gasoline line.

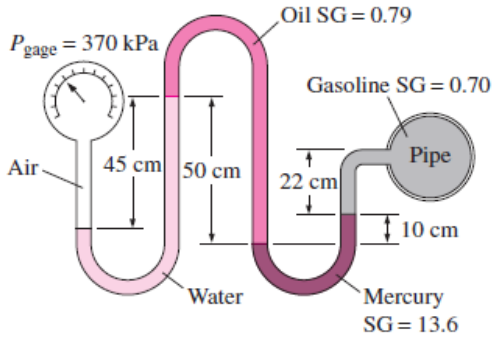


## Solution

**1-114** A gasoline line is connected to a pressure gage through a double-U manometer. For a given reading of the pressure gage, the gage pressure of the gasoline line is to be determined.

***Assumptions*** **1** All the liquids are incompressible. **2** The effect of air column on pressure is negligible.

***Properties*** The specific gravities of oil, mercury, and gasoline are given to be 0.79, 13.6, and 0.70, respectively. We take the density of water to be $\rho_w$ = 1000 kg/m$^3$.

***Analysis*** Starting with the pressure indicated by the pressure gage and moving along the tube by adding (as we go down) or subtracting (as we go up) the $\rho gh$ terms until we reach the gasoline pipe, and setting the result equal to $P_{gasoline}$ gives

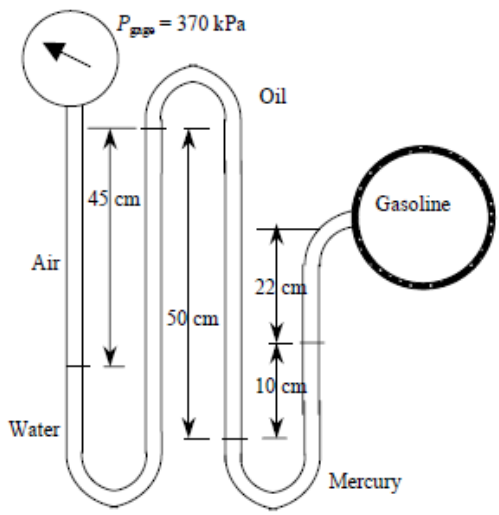


$$P_{gage} - \rho_w g h_w + \rho_{oil} g h_{oil} - \rho_{Hg} g h_{Hg} - \rho_{gasoline} g h_{gasoline} = P_{gasoline}$$

Rearranging,

$$P_{gasoline} = P_{gage} - \rho_w g(h_w - SG_{oil} h_{oil} + SG_{Hg} h_{Hg} + SG_{gasoline} h_{gasoline})$$

Substituting,

$$P_{gasoline} = 370\text{ kPa} - (1000\text{ kg/m}^3)(9.81\text{ m/s}^2)[(0.45\text{ m}) - 0.79(0.5\text{ m}) + 13.6(0.1\text{ m}) + 0.70(0.22\text{ m})] \times \left(\frac{1\text{ kN}}{1000\text{ kg}\cdot\text{m/s}^2}\right)\left(\frac{1\text{ kPa}}{1\text{ kN/m}^2}\right)$$

$$= \mathbf{354.6\ kPa}$$

Therefore, the pressure in the gasoline pipe is 15.4 kPa lower than the pressure reading of the pressure gage.

***Discussion*** Note that sometimes the use of specific gravity offers great convenience in the solution of problems that involve several fluids.