7. Determine R_T for each circuit in Figure 4–67. Show how to measure R_T with an ohmmeter.

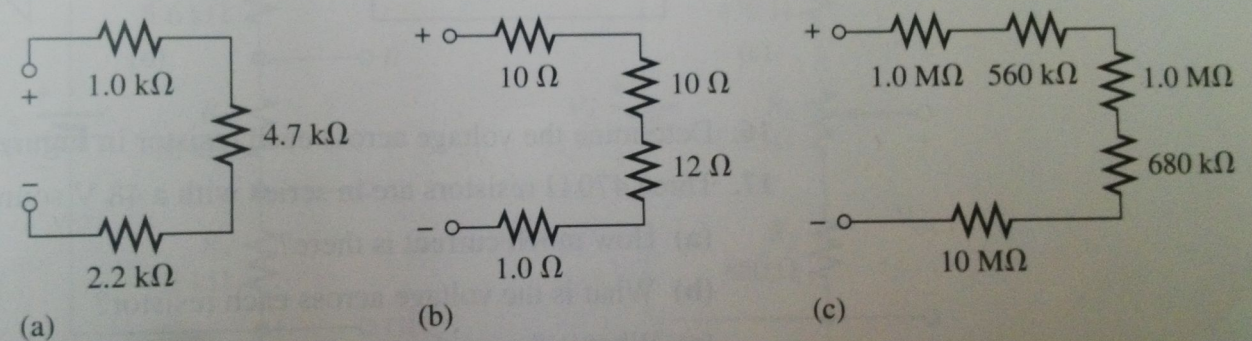

10. The total resistance in Figure 4–68 is 20 kΩ. What is the value of R_5?

▶ FIGURE 4–68

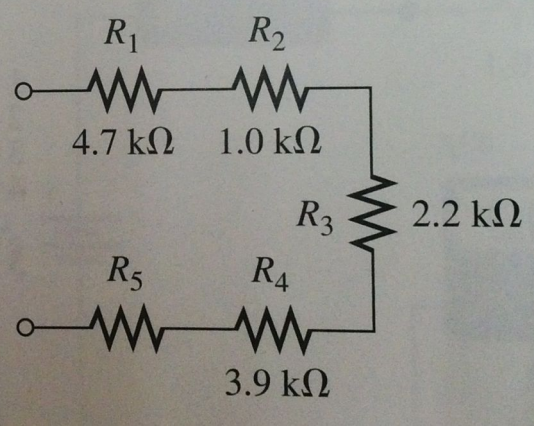

23. Determine the unspecified voltage drop(s) in each circuit of Figure 4–71. Show how to connect a voltmeter to measure each unknown voltage drop.

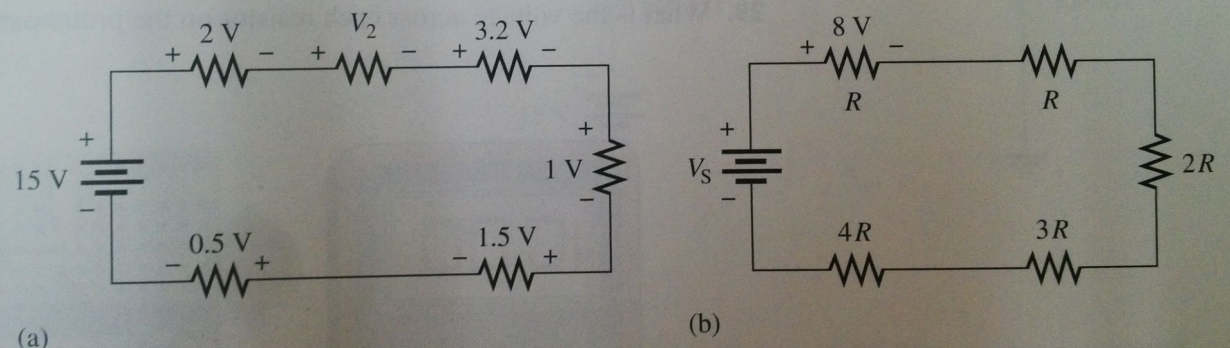

25. Find the voltage between A and B in each voltage divider of Figure 4–72.

FIGURE 4–72

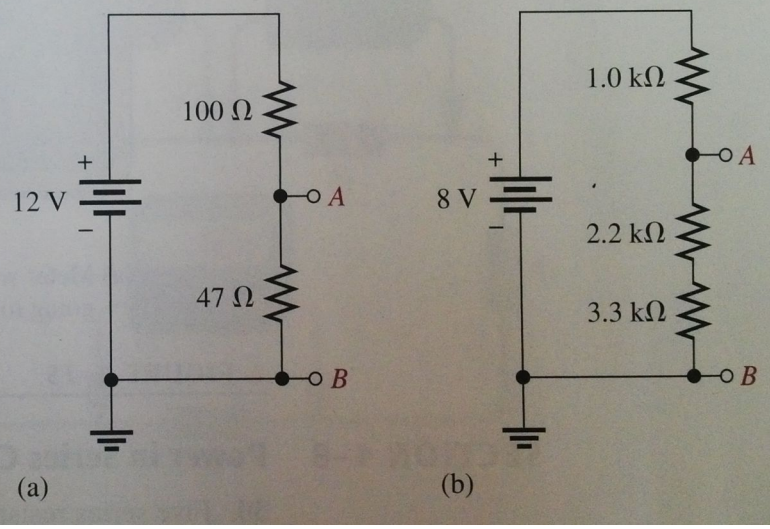

27. Determine the minimum and maximum output voltage from the voltage divider in Figure 4–73(b).

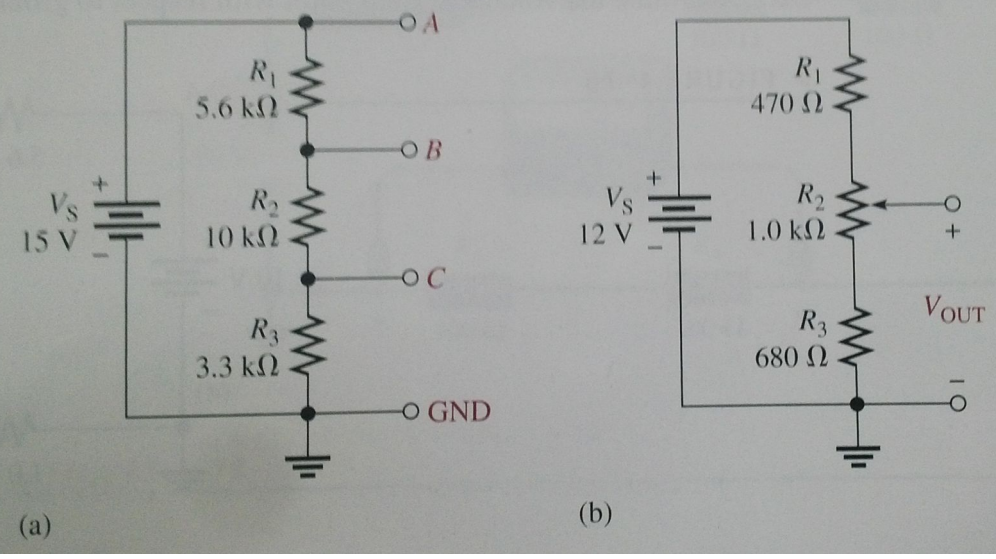

32. Determine the voltage at each point with respect to ground in Figure 4–76.

▶ **FIGURE 4–76**

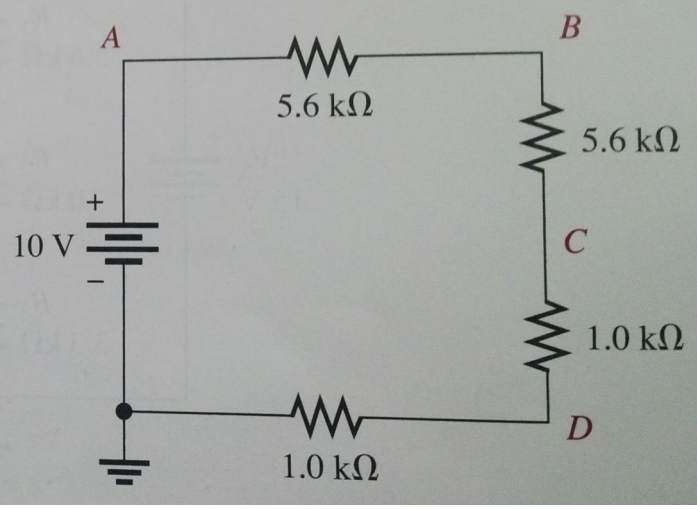

6. Calculate R_T for each circuit in Figure 5–60.

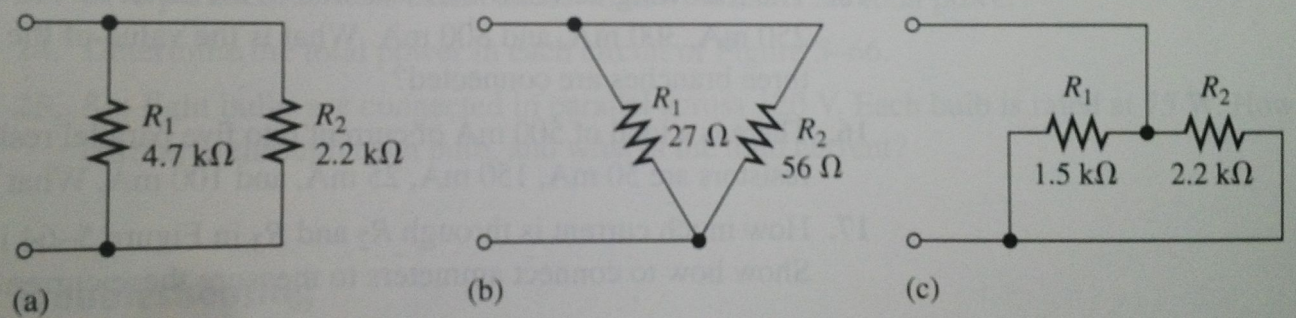

11. What is the total current, I_T, in each circuit of Figure 5–62?

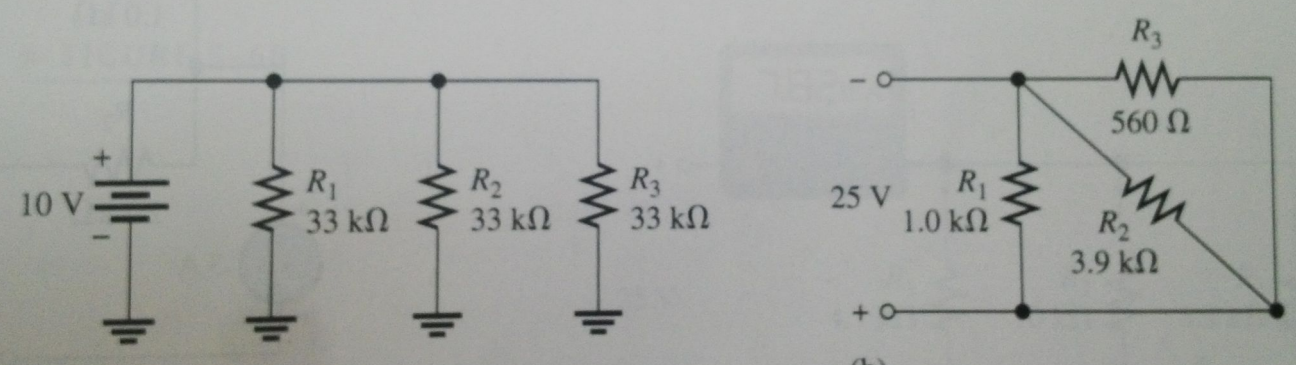

21. How much branch current should each meter in Figure 5–65 indicate?

▶ **FIGURE 5–65**

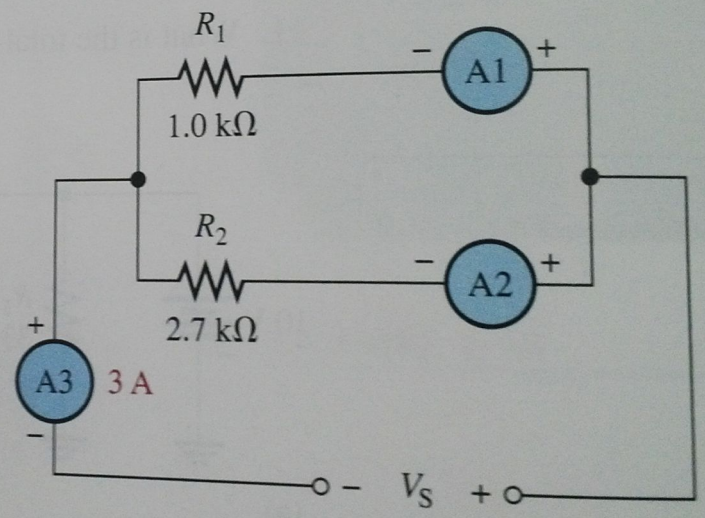

36. What is the total resistance between terminal *A* and ground in Figure 5–74 for the following conditions?

(a) SW1 and SW2 open

(b) SW1 closed, SW2 open

(c) SW1 open, SW2 closed

(d) SW1 and SW2 closed

▶ **FIGURE 5–74**

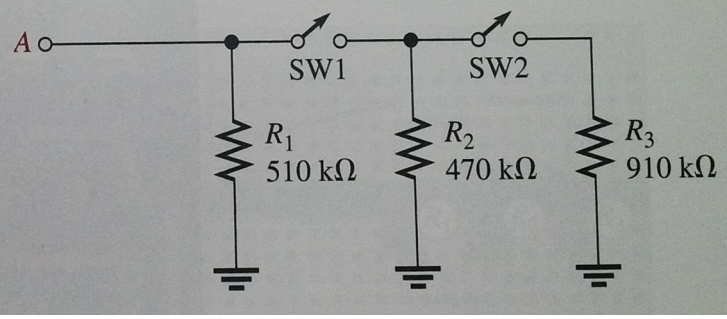

28. What is wrong with the circuit in Figure 5–68?

▶ **FIGURE 5–68**

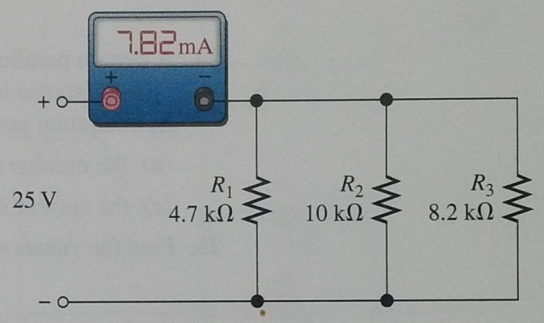

29. Find the open resistor in Figure 5–69.
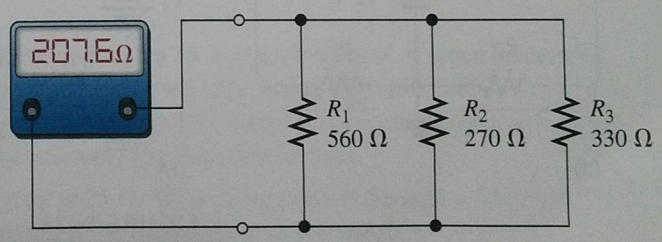
▶ **FIGURE 5–69**