EASTERN MEDITERRANEAN UNIVERSITY
FACULTY OF ENGINEERING
DEPARTMENT OF MECHANICAL ENGINEERING

Course Code: MENG233
Course Name: DYNAMICS
Semester/ Year: Fall 2026-27
Instructor: Prof. Dr. Qasim Zeeshan
Assistant: Mr. Emmanuel Chukwueloka Onyibo
Mr. Garshasp Sarkon
Assessment: Labs
Submission Date:

LAB PROJECT # 1: Measurement of Static and Kinetic Coefficients of Friction
LAB PROJECT # 2: Conservation of Momentum
LAB PROJECT # 3: Modeling, Simulation and Analysis of a Four Bar Mechanism
LAB PROJECT # 4: Measurement of Coefficient of Restitution

GROUP NO. : .....
STUDENT NO: ..... NAME, SURNAME: .....
STUDENT NO: ..... NAME, SURNAME: .....
STUDENT NO: ..... NAME, SURNAME: .....
STUDENT NO: ..... NAME, SURNAME: .....
STUDENT NO: ..... NAME, SURNAME: .....

SECTIONS:

No.	STUDENT OUTCOMES	COURSE LEARNING OUTCOMES	WEIGHT OF SECTION /100	MARKS OBTAINED	REMARKS
L-1	1, 5, **6**	2	**25**		
L-2	1, 5, **6**	2	**25**		
L-3	1, 5, **6**	3, 5	**25**		
L-4	1, 5, **6**	2	**25**		
TOTAL:(Out of 100)					

Course Learning Outcomes		Student Outcomes						
		1	2	3	4	5	6	7
1	Analyze the kinematics of particles	X						
2	Analyze the kinetics of particles using: (force and acceleration, principle of work and energy, or principle of impulse and momentum)	X				X	X	
3	Analyze the planar kinematics of rigid bodies (Relative motion analysis: velocity and acceleration)	X				X	X	
4	Analyze the planar kinetics of rigid bodies using: (force and acceleration, principle of work and energy, or principle of impulse and momentum)	X						
5	Use the techniques learned to model and analyze a dynamic system.	X				X	X	X

Instructions:

1. Late submissions will be penalized with 10 marks/ day.
2. Draw neat, labeled diagrams where necessary.
3. Write relevant equations and write your Assumptions where necessary.
4. Be clear and specific and include units. Give explanatory notes where necessary. Please carry out each step explicitly.
5. Please provide the references using APA Style of Referencing.
6. References should be from the Textbook or from an authentic source.
7. Please include the equations, diagrams, plots and figures in the report.
8. All figures and Tables must be numbered and captioned.
9. Please submit the pdf Soft copy of the report via the MOODLE LMS/ Microsoft Assignment along with the MATLAB codes, Simulink. AVI File. Code/ Simulation etc.
10. The file/ folder uploaded should be named as [MENG233-PROJECT-GROUP NO]. Files with any other name or format will be disregarded. Do not forget the cover page Files with any other name or format will be disregarded. Do not forget the cover page.

LAB PROJECT # 1:

Measurement of Static and Kinetic Coefficients of Friction

OBJECTIVES

In this lab you will

- Investigate how friction varies with an applied force.
- Measure the coefficients of static and kinetic friction.
- Learn how to use a force sensor.
- Plot and analyze data.

EQUIPMENT

- Force sensor and lab pro
- Wooden block (friction tray)
- Masses
- Data collector

THEORY

The friction forces that arise between any two contacting surfaces are divided into two broad categories based on the relative motion of the surfaces. ***Static friction*** exists whenever there is no relative motion and ***kinetic friction*** whenever one surface moves relative to the other. The magnitude of each friction force depends on the number of the chemical bonds formed between the two surfaces and their average strength. The direction of each friction force is always opposite the horizontal component of the applied force.

Suppose you wish to slide a heavy box of mass m along a horizontal surface with a force F. As you increase F, an equal and opposite static friction force f_S arises to keep the box at rest until F equals the maximum value of f_S:

$$f_S\,(\max) = \mu_S N \qquad \textit{Equation 1.}$$

where μ_S is the coefficient of static friction and N is the normal force. When F exceeds f_S (max), static friction is no longer present. The box now slides in the direction of F. A kinetic friction force f_k now acts to opposite the motion. Unlike its static counterpart, f_k does not match the applied force up to a maximum value. Its magnitude is constant and given by the formula

$$f_k = \mu_k N \qquad \textit{Equation 2.}$$

where μ_k is the coefficient of kinetic friction. If you wish to slide the box at uniform st velocity, then F must equal f_k by Newton's 1 Law. However, if you accelerate the box then $F > f_k$ by Newton's 2nd law of motion. Coefficients μ_S and μ_k are depend upon the average bond strength between the two surfaces. The normal force along a flat surface is simply equal to the weight of the object, or $N = mg$. N is an indirect measure of the number of bonds formed between the two surfaces. In other words, heavier objects require greater forces to get them moving because they press their supporting surface tighter thus forming more bonds.

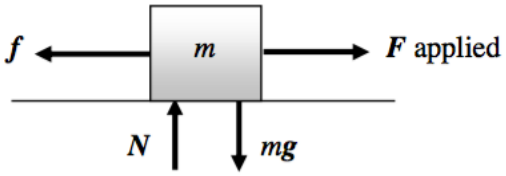

Figure 1: A mass m pulled along a rough surface

PROCEDURE

1. Disconnect the motion detector from the Lab Pro interface. Connect the cable of the force sensor to Channel 1 of Lab Pro.

2. Measure the mass of the wooden block and record the value on your data sheet.

3. Fasten a piece of string to the hook on the force sensor, and then fasten the opposite end to the hook on the wooden block.

4. Brush off any dust and other debris.

5. Set up the equipment as shown in the figure 2. Place the track on a flat, horizontal surface.

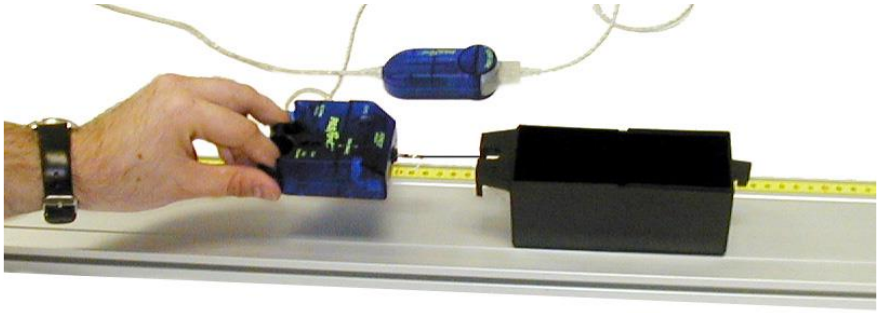

Figure 2: Experiment set up

6. Place the felt friction accessory tray on the track with the felt down.

7. Make sure you can see the graph labeled Friction Forces vs. Time. Hold the Force Sensor horizontally a few inches above the track. With slack in the string, press the zero-button on the sensor. To zero the Force Sensor when measuring horizontally, with the Force

8. Sensor oriented horizontally, press the zero button.

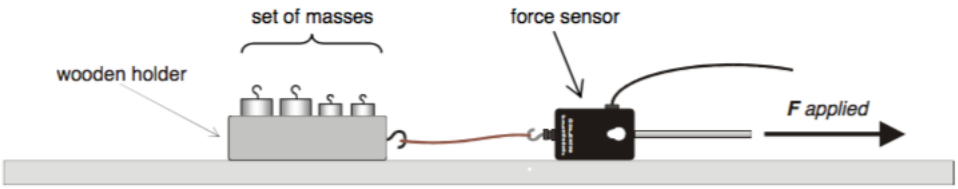

Figure 3: A wooden block + masses pulled with the force sensor

9. Gently pull the force sensor with a horizontal force *F* as shown in Figure 3. Increase ***F*** slowly and steadily until the wooden holder begins to slide. At this point, you may have to decrease ***F*** so that the holder maintains a uniform velocity.
10. With out the masses or any mass you perform the first pull. Repeat again for second trial.
11. For a second run, add a 250-gram mass bar to the wooden block and perform the above procedure again (Set-up 9). Don't forget to zero the sensor before recording data. Repeat again for second trial.
12. For a third run, add a second 250-gram mass to the wooden block and perform the above procedure again (Set-up 9). Repeat again for second trial.
13. Make sure there is a slack in the string (i.e. zero tension). Do not pull the system till you calibrate the force sensor.
14. In tables below record all the data: the mass of the wooden block, total weight, static and kinetic force, and their coefficients.
15. When you get your recorded data for the force-time graph you must plot the graph by yourself and it should look exactly like figure 4.
16. From your force-time graph take the average force and use it as your approximate kinetic force and the peak value to be your static force(f_S (max)) and find their coefficients.

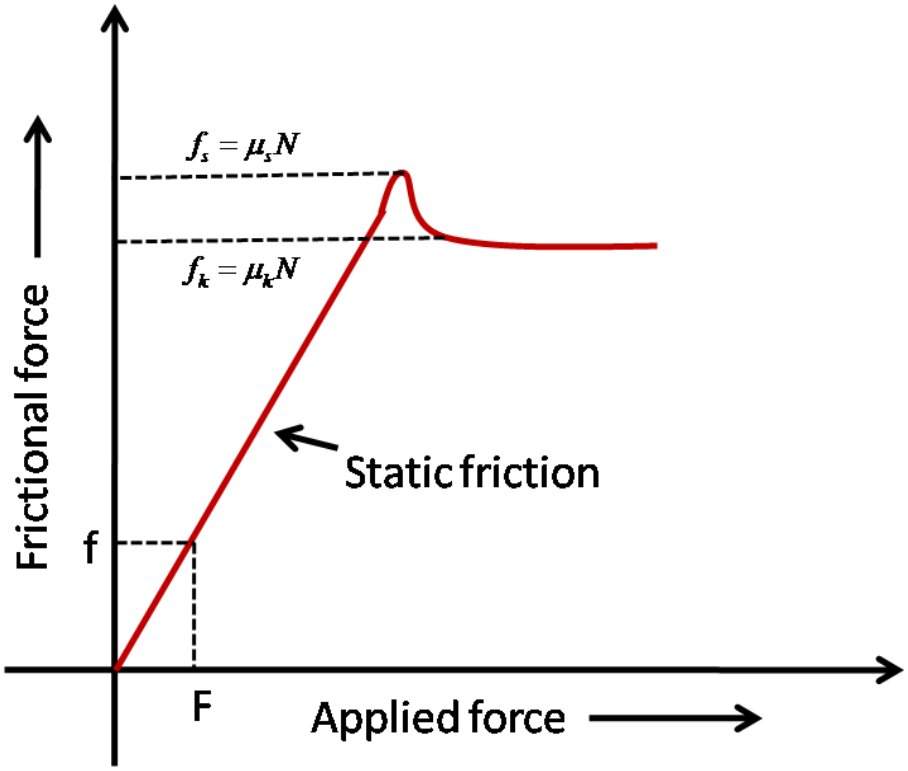

Figure 4: A sample force-time graph

RESULTS

Please in this section tabulate the data recorded by the force sensor and illustrate them in a force-time graphs.

DATA AND ANALYSIS

Mass of the wooden block = ……. kg

Table 1: Static friction data

	Total Mass (kg)	Total weight (N)	f_s (max) Trial 1 (N)	f_s (max) Trial 1 (N)	f_s (max) Average (N)	μ_s *for* f_k Average
Wooden Block						
Wooden Block + 250g						
Wooden Block + 500g						

Table 2: Kinetic friction data

	Total Mass (kg)	Total weight (N)	f_k Trial 1 (N)	f_k Trial 2 (N)	f_k Average (N)	μ_k *for* f_k Average
Wooden Block						
Wooden Block + 250g						
Wooden Block + 500g						

QUESTIONS

Q1. For a fixed trial, compare your values for the average maximum static friction force (Table 1) and the average kinetic friction force (Table2). Based on your data, which one is larger? Is this reasonable? Explain your results.

Q2. How do you expect the friction between the trays and the track to change as the trays and track are pressed more firmly against each other (that is, as the normal force increases)?

Q3. Does the average kinetic friction force vary as the total weight increases? If so, explain why.

Q4. For a particular weight, compare the coefficient of static friction and the coefficient of kinetic friction. Based on your data, which is larger? Is this reasonable? Explain your results.

Q5. What are the SI units of these two coefficients? Justify your answer using Equation 1 and 2.

LAB PROJECT # 2:

Conservation of Momentum

OBJECTIVES

The aim of the experiment is to study the conservation of momentum experimentally in inelastic and elastic collisions.

EQUIPMENT

- Data collector
- Two motion sensors
- Two magnetic/friction carts
- Horizontal track
- Mass blocks



Figure 5: collision set-up

INTRODUCTION AND THEORY

Collisions are an important way of studying how objects interact. Conservation laws have been developed that allow one to say quite a bit about what is happening without knowing the exact details of the interaction during the collision. In this lab, you will show that the total momentum of the system is always conserved when there is no net external force acting on the system, and that the total mechanical energy of the system is only conserved in certain kinds of collisions. These principles are important in studying automobile collisions, planetary motion, and the collisions of subatomic particles.

Momentum is the product of mass (m) and velocity (v), so it has the units of kg·m/sec. Momentum is a vector quantity with its direction the same as the velocity. We do not have a special name for the unit of momentum, but we do commonly use the letter p to represent the momentum vector.

$$\mathbf{p = m \cdot v} \qquad \mathbf{(1)}$$

Conservation of Momentum is derived in your textbook using Newton's Third Law, and also deals with the quantity called impulse which is ***force* × *time***, where *time* is the time interval over which the force acts. In a closed system, momentum is conserved when objects are interacting with each other.

In this experiment, we will be dealing with collisions in one dimension. The motion of the bodies involved is constrained to a horizontal track. This means that the velocity and momentum vectors can be only in one of two directions, $+x$ or $-x$, where x represents the coordinate along the track. Since we will be dealing with only two bodies, the Law of Conservation of Momentum can be written as for two bodies:

$$\mathbf{m_1(v_1)_1 + m_2(v_2)_1 = m_1(v_1)_2 + m_2(v_2)_2} \qquad \mathbf{(2)}$$

Thus, in order to prove conservation of momentum, we must know the masses of each of the two bodies and their vector **velocities (magnitude and direction)** before and after the collision

PROCEDURE

1. Set up the equipment as shown in the figure 1
2. Place the dynamic track on a table and ensure that the track is leveled.
3. Place one motion sensor at each end of the track.
4. Connect the sensors to data collector.
5. Place two carts on each end of the dynamic track, both facing each other. If the cart rolls one way or the other, use the adjustable foot at one end of the track to raise or lower that end until the track is level and the cart will not roll one way or the other.
6. Adjust each sensor so it can measure the motion of a cart as it moves from the end of the track to the middle and back again.
7. ***Assumptions:*** the track is leveled, friction is negligible, and direction doesn't matter.
8. Start recording the collision data on to the Data collector.
9. Manually push both carts to create the collision.
10. You can repeat steps 7 and 8 with the same magnetic carts
11. Add a mass block to each magnetic cart or any of the carts.
12. Manually push the carts to create another collision.
13. Record collision data on to the Data Collector.
14. Repeat steps 10 to 11 with same magnetic carts with extra masses and record the data.
15. Measure the velocity of both carts before and after the collision and record the dat.
16. Find the initial and final momentum as well as right before and after the strike.
17. You can iterate the experiment to higher the preciseness of your data.

For inelastic collision

18. Turn the carts so the Velcro on each cart will stick together when the carts collide.
19. Repeat above procedures.
20. Make sure that after the collision the carts stick together and move with some velocity common to both.

EXPERIMENTAL DATA & ANALYSIS

Check the observed data by the aid of equation one. Uncertainties should be taken into account to have the preciseness and error analysis in your reports; you may neglect the uncertainty of all masses. In each measurement, you need to find all the initial and final masses and velocities, and use them to calculate the initial and final total momentum and *tabulate your results*. ***WRITE DOWN THE ERROR ANALYSIS.***

Mass of Red cart (m_1) =_____

Mass of Blue cart (m_2) =_____

Table 3 Observed data Before Collision

	Mass of the carts		**Before Collision**			
	m_1	**m_2**	**Velocity**		**Momentum**	
Iteration	**Cart 1**	**Cart 2**	**Cart 1**	**Cart 2**	**Cart 1**	**Cart 2**
One						
Two						
Three						

Table 4 Observed data After Collision

	Mass of the carts		**After Collision**			
	m_1	**m_2**	**Velocity**		**Momentum**	
Iteration	**Cart 1**	**Cart 2**	**Cart 1**	**Cart 2**	**Cart 1**	**Cart 2**
One						
Two						
Three						

RESULTS

1. Plot the graphs of velocity and momentum of each cart once separately (for any iteration, but do specify which) versus time.

2. Plot the graphs of velocity and momentum once all together (for cart 1 and 2) versus time.

ANSWER THE FOLLOWING QUESTIONS

1. Differentiate between elastic and inelastic collision.
2. What can you conclude about the relationship between the momentum before and after an inelastic collision?
3. How the momentum equation is created?
4. How the momentum conservation is created?
5. Explain the reason why a spaceship can start flying and leave the earth through conservation of momentum concept.

DISCUSSION & CONCLUSION

State your observation during the experiment. Support your memo by mentioning the error sources, which affect the accuracy of results and analysis. Did you conserve momentum? Was there a bias? ? In your report comment on whether your predictions and assumptions were correct, and if not, why? What conclusions can you draw?

LAB PROJECT # 3:

Modeling of a Four Bar Mechanism

Simscape Multibody Bodies

Rigid Body Essentials

Bodies are the basic components of a Simscape™ Multibody™ model. They are the parts that you interconnect with joints and constraints to model an articulated mechanism or machine. As an example, a four-bar linkage contains four bodies, each a binary link, which interconnect via four revolute joints. The figure shows the four bodies, labeled A–D.

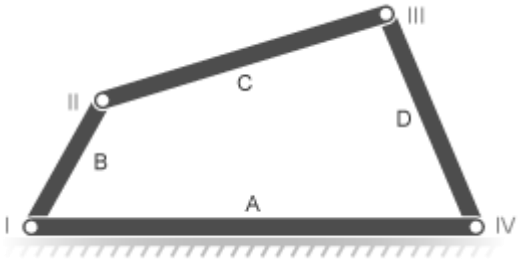

In a Simscape Multibody model, all bodies are rigid. They are idealizations in which internal strains always equal zero. True rigid bodies do not exist in nature but, under normal operating conditions, many engineered components behave as approximately rigid bodies—that is, with negligible deformation. In general, the rigid-body approximation provides accurate modeling results whenever the expected deformation is much smaller than the characteristic length of the modeled system.

Rigid Body Properties

Solid properties determine the appearance and behavior of a rigid body. For example, the moments and products of inertia determine the angular acceleration of a free rigid body in response to an applied torque. In Simscape Multibody, solid properties fall into three groups—geometry, inertia, and graphic—each with group-specific parameters. The figure lists these properties.

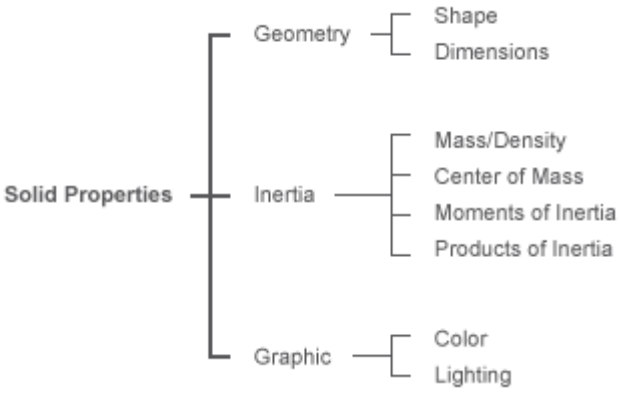

To specify the solid properties of a rigid body, you use the blocks in the Body Elements library. The library contains three blocks, of which Solid is the most frequently used. This block enables you to specify all the solid properties of a rigid body in a single place. The remaining blocks, Inertia and Graphic, serve special cases, such as visualizing certain frames and modeling mass disturbances.

The table summarizes the primary purposes of the Body Elements blocks.

Block	Purpose
Solid	Specify the solid properties—geometry, inertia, graphic—of a simple rigid body or of part of a compound rigid body.
Inertia	Specify the inertial properties of a mass element, such as a mass disturbance present in rigid bodies.
Graphic	Select a graphical icon to visualize any Simscape Multibody frame in a model.

Rigid Body Frames

In Simscape Multibody, rigid bodies have frames, each identifying a position and orientation in 3-D space. These frames are important to the Simscape Multibody modeling workflow. They enable you to specify the correct position and orientation for each of the following tasks:

- Connect joints and constraints between rigid bodies. For example, you always connect a revolute joint between two frames in separate rigid bodies (or, alternatively, between a rigid body frame and the world frame).
- Apply forces and torques to or between rigid bodies. For example, you always apply an external force and torque to a single frame in a rigid body.
- Sense motion, forces, and torques between rigid bodies. For example, you always sense the relative position coordinates between two frames on different rigid bodies (or, alternatively, between a rigid body frame and the world frame).

The Solid block, the main component of any body subsystem, provides a reference frame through frame port R. You can create additional frames in the Solid block dialog box using its frame-creation interface. This interface is accessible from the **Frames** area of the Solid block dialog box. The Solid block adds a frame port for every frame that you create.

Drawing a frame connection line between frame ports on different Solid blocks makes the port frames coincident in space. You can translate and rotate these frames relative to each other by adding a Rigid Transform block to the connection line. This block enables you to specify the pose of the follower frame relative to the base frame.

The figure shows an example of a rigid body subsystem in Mechanics Explorer. The rigid body is a binary link with three frames, each associated with a solid section of the link—hole, main, and peg. Rigid transforms specify the translational offset between each pair of frames.

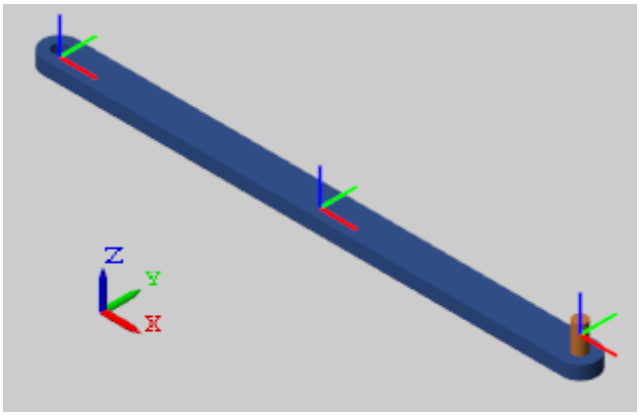

In the binary-link block diagram, Rigid Transform blocks specify the translation transforms between the three frames. A total of two such blocks are needed, one between each pair of frames. The following figure shows the binary link block diagram. To view this subsystem, at the MATLAB® command prompt, enter smdoc_binary_link_a.

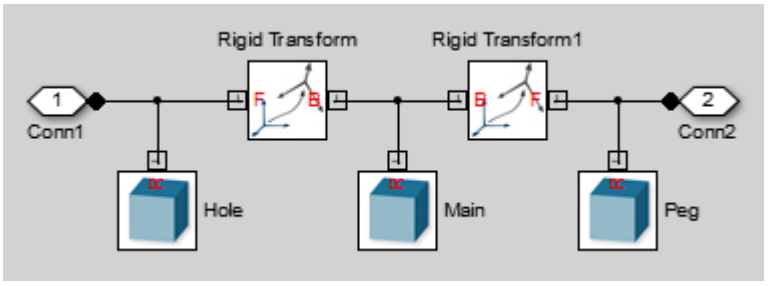

Rigid Body Delimitation

In a Simscape Multibody model, a set of Solid and Rigid Transform blocks between two joint blocks or between one joint block and the World Frame block constitutes a rigid body. During simulation, Simscape Multibody software computes the center of mass for each such block subset. Gravitational Field blocks in your model, if any, then apply a gravitational force at the calculated centers of mass.

If you connect two halves of a rigid body using a Weld Joint block, the Simscape Multibody model treats the two halves as rigidly connected but independent rigid bodies. Any Gravitational Field blocks in your model then exert a gravitational force at the center of mass of each half. This strategy enables you to account for gravitational torques acting on a rigid component, such as an asteroid orbiting the Sun.

The figure shows a simple-pendulum model. In this model, a subsystem block neatly encapsulates each rigid body. The model contains two rigid bodies: a pivot mount and a binary link. A joint block separates the mount and the link.

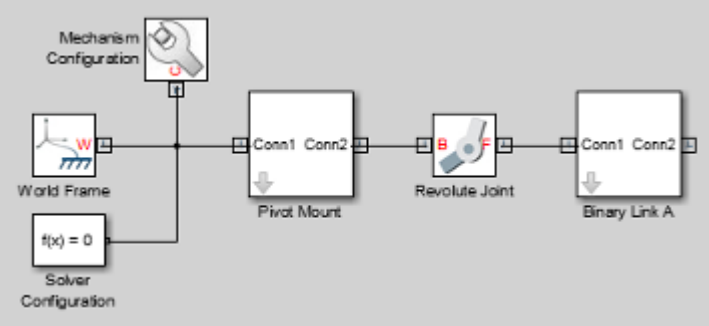

The following figure shows the same model without subsystem blocks. The model treats the blocks on either side of the Revolute Joint block as separate rigid bodies. The blocks to the left of the joint block represent the pivot mount, while the blocks to the right of the joint block represent the binary link.

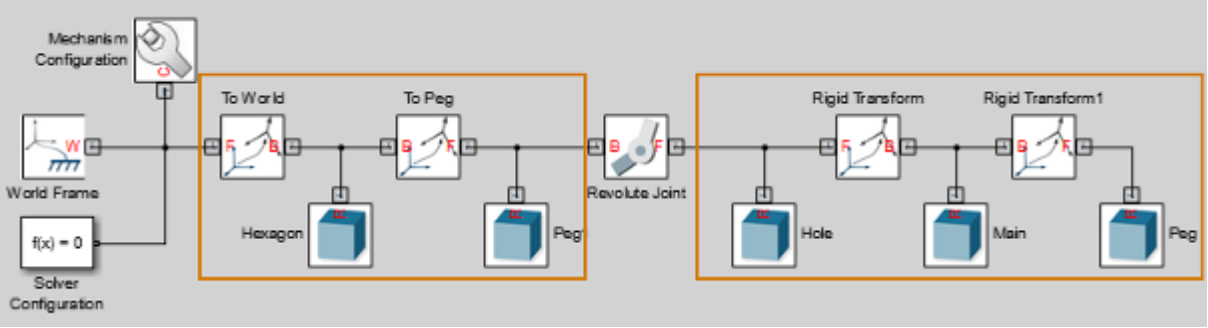

If you connect a Weld Joint block between the Main and Rigid Transform1 blocks, the Simscape Multibody model recognizes three rigid bodies:

- Rigid body I to the left of the Revolute Joint block.
- Rigid body II between the Revolute Joint and Weld Joint blocks.
- Rigid body III to the right of the Weld Joint block.

The following figure shows the modified model with the Weld Joint block. The Mechanism Configuration, World Frame, and Solver Configuration blocks are omitted to conserve space.

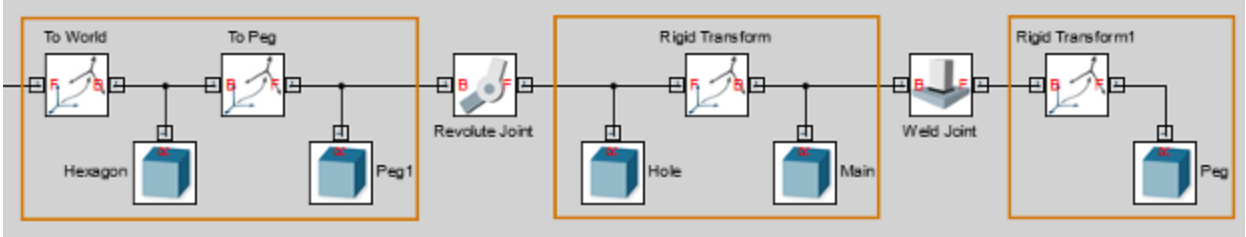

Simple and Compound Rigid Bodies

Rigid bodies can be simple or compound. The difference between the two rigid body types lies in their complexity. Simple rigid bodies typically have basic shapes, uniform mass distributions, and a single color. Compound rigid bodies have more complex shapes and, occasionally, segmented mass distributions that require multiple Solid blocks to model.

Consider a binary link, the basic component of mechanical linkages such as the double pendulum and the four-bar mechanism. Depending on the level of detail you want to incorporate in your model, you can treat the binary link as a simple rigid body or as a compound rigid body:

- Simple — Approximate the rigid-body geometry using a standard Simscape Multibody shape. For example, you can model the binary link using a brick shape with a uniform mass distribution and a single color. The tutorial Model Simple Link shows this approach.
- Compound — Model the rigid-body geometry accurately using multiple standard shapes. For example, you can model the binary-link main and hole sections using separate Solid blocks, each with its own shape. The tutorial Model Link shows this approach.

Model Four Bar

Model Overview

The four-bar linkage is a planar closed-loop linkage used extensively in mechanical machinery. This linkage has four coplanar bars that connect end-to-end with four revolute joints. In this example, you model a four-bar linkage using the Binary Link and Pivot Mount custom blocks that you created in previous examples. For an advanced application of the four-bar linkage, see the bucket actuating mechanism of the Backhoe featured example.

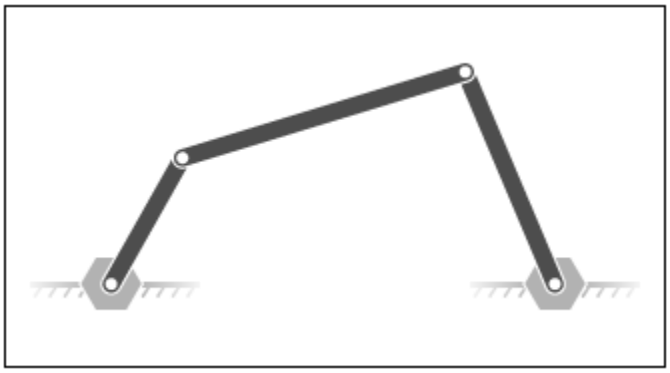

Modeling Approach

To model the four-bar linkage, you represent each physical component with a Simscape™ Multibody™ block. The linkage in this example has five rigid bodies—three binary links and two pivot mounts—that connect in a closed loop through four revolute joints. Two of the binary links have one peg and one hole. The third binary link has two holes. The fourth link is implicit: the fixed distance between the two coplanar pivot mounts represents this link.

You represent the binary links and pivot mounts using the custom library blocks that you created in previous examples. You represent the four revolute joints using four Revolute Joint blocks from the Simscape Multibody Joints library.

The two pivot mounts connect rigidly to the world frame. For this reason, the implicit link acts as the ground link. Two Rigid Transform blocks provide the rigid connection between the two pivot mounts and the World frame. A translation offset in each Rigid Transform block displaces the two pivot mounts symmetrically along the world frame Y axis.

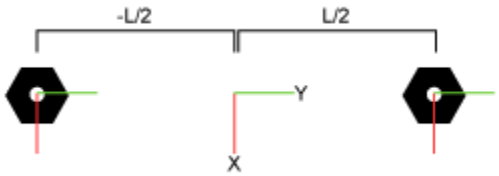

To guide model assembly, you can specify the desired initial state for one or more joints in the model. To do this, you use the **State Targets** menu of the joint blocks. The state targets that you can specify are the joint position and velocity. These are angular quantities in revolute joints. You can specify state targets for all but one of the joints in a closed loop.

Build Model

To model the four-bar linkage:

1. Start a new model.
2. Drag these blocks to the model. The Rigid Transform blocks specify the distance between the two pivot mounts. This distance is the length of the implicit ground link.

Library	Block	Quantity
Simscape > Utilities	Solver Configuration	1
Simscape > Multibody > Utilities	Mechanism Configuration	1
Simscape > Multibody > Frames and Transforms	World Frame	1
Simscape > Multibody > Frames and Transforms	Rigid Transform	2

3. Connect and name the blocks as shown in the figure. The base frame ports of the Rigid Transform blocks must connect to World Frame block.

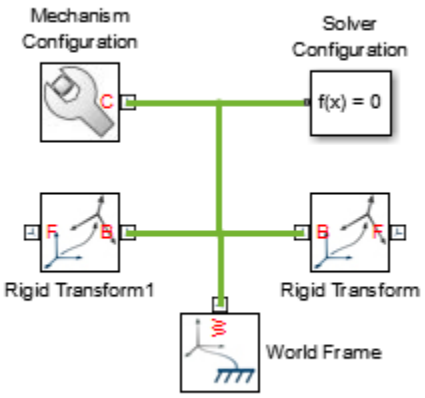

4. From the **Simscape** > **Multibody** > **Joints** library, drag four Revolute Joint blocks into the model.
5. At the MATLAB® command prompt, enter smdoc_compound_rigid_bodies. A custom library with compound rigid body blocks opens up.
6. From the smdoc_compound_rigid_bodies library, drag these blocks. Each block represents a rigid body present in the four bar assembly. See the tutorials in the table for instructions on how to create the blocks.

Block	Quantity
Pivot Mount	2
Binary Link A	2
Binary Link B	1

7. Connect and name the blocks as shown in the figure. You must position the frame ports of the custom rigid body blocks exactly as shown.

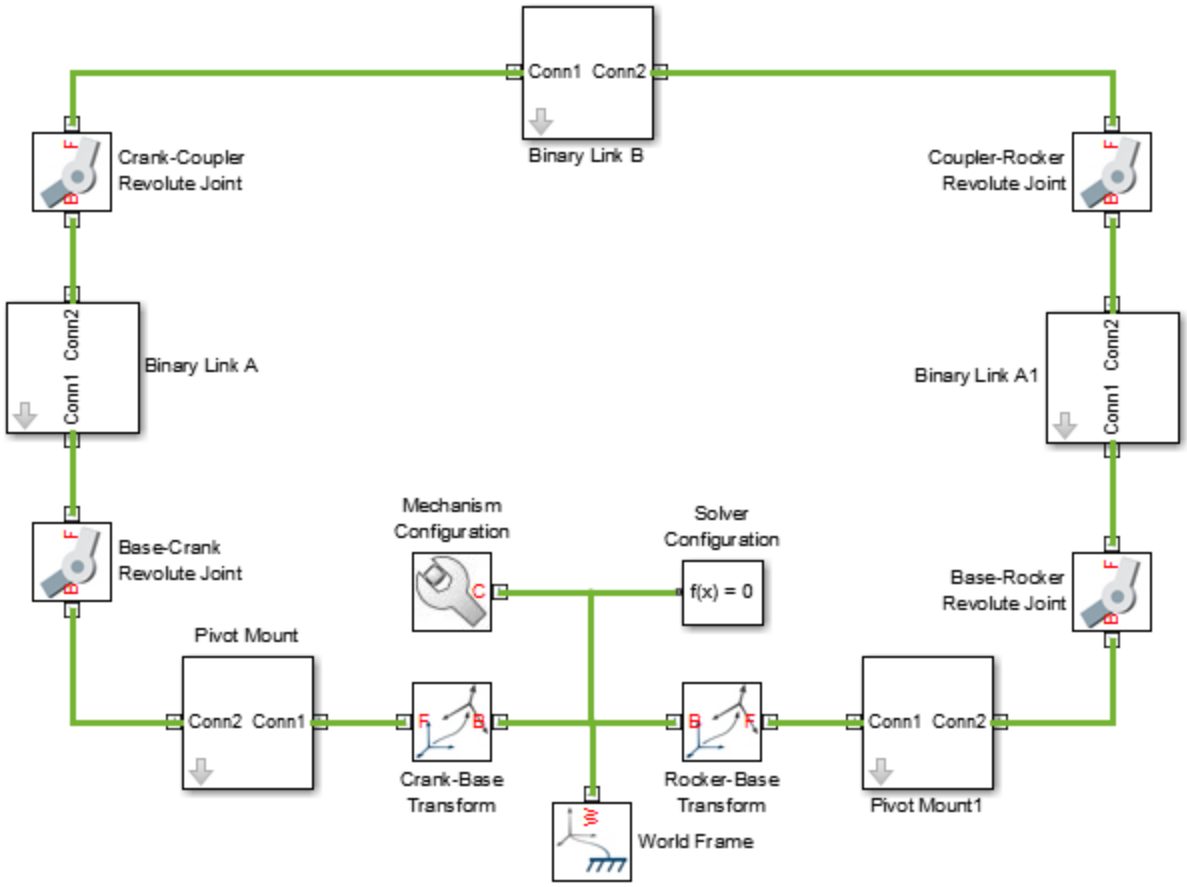

Specify Block Parameters

1. In the Rigid Transform block dialog boxes, specify the offset between the pivot mounts and the world frame.

Parameter	Crank-Base Transform	Rocker-Base Transform
Translation > Method	Standard Axis	Standard Axis
Translation > Axis	-Y	+Y
Translation > Offset	15 in units of cm	15 in units of cm

2. In each binary link block dialog box, specify the length parameter.

Block	Length (cm)
Binary Link A	10
Binary Link B	35
Binary Link A1	20

Guide Assembly and Visualize Model

The model is now complete. You can now specify the desired initial state for one or more joints in the model. In this example, you specify an initial angle of 30° for the Base-Crank joint. To do this:

1. Double-click the Base-Crank Revolute Joint block.
2. In the block dialog box, expand **State Targets** and select **Position**.
3. In **Value**, enter -30 and press **OK**.
4. In the menu bar, select **Simulation** > **Update Diagram**

   Mechanics Explorer opens with a static display of the four-bar linkage in its initial configuration. If the joint state targets that you specified are valid and compatible, the initial configuration matches those state targets. The figure shows the static

display that you see in Mechanics Explorer after updating the model. To obtain the view shown in the figure, in the Mechanics Explorer toolstrip select the isometric view button .

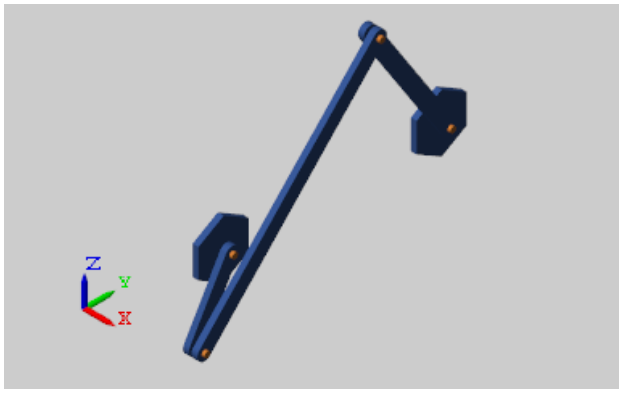

You can guide assembly so that the four-bar linkage assembles in an open configuration instead. To do this, you must specify a position state target for at least one more joint. You do not have to specify this target precisely. If you have a general idea of what the target should be, you can enter an approximate value and select a low priority level for that target.

Closed-loop kinematic chains like the four-bar linkage are especially vulnerable to assembly issues. Even when the model assembles, Simscape Multibody may fail to meet one or more state targets. You can check the assembly status of the model and of the joints using the Model Report utility:

1. In the Mechanics Explorer menu bar, select **Tools** > **Model Report**.
2. Examine the model report for red squares or yellow triangles. These shapes identify issues in the assembly or in the joint state targets.

The figure shows the model report for the four bar linkage in the open configuration. A green circle indicates that Simscape Multibody satisfied the Base-Crank Revolute Joint state target precisely. A yellow circle indicates that Simscape Multibody satisfied the Base-Rocker Revolute Joint state target approximately.

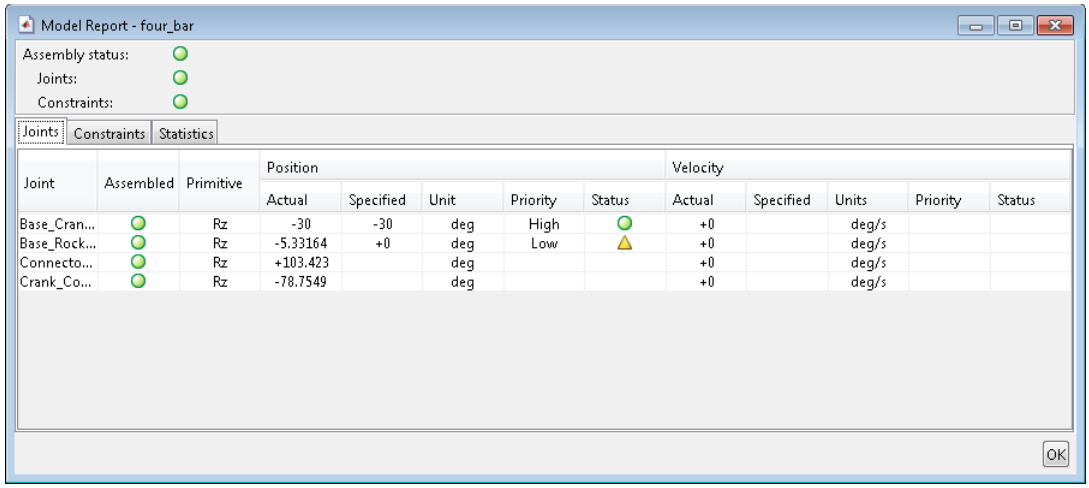

Simulate Model

Run the simulation, e.g., by selecting **Simulation** > **Run**. Mechanics Explorer shows a 3-D animation of the four bar assembly. The assembly moves due to gravity, specified in the Mechanism Configuration block.

Open Reference Model

To see a complete model of the four–bar assembly, at the MATLAB command prompt enter:

- smdoc_four_bar

Simulation and Analysis of a Four Bar Mechanism
Prescribe Joint Motion in Four-Bar Model

Model Overview

In this lab, you prescribe the time-varying crank angle of a four-bar linkage using a Revolute Joint block. Then, during simulation, you sense the actuation torque at the same joint corresponding to the prescribed motion.

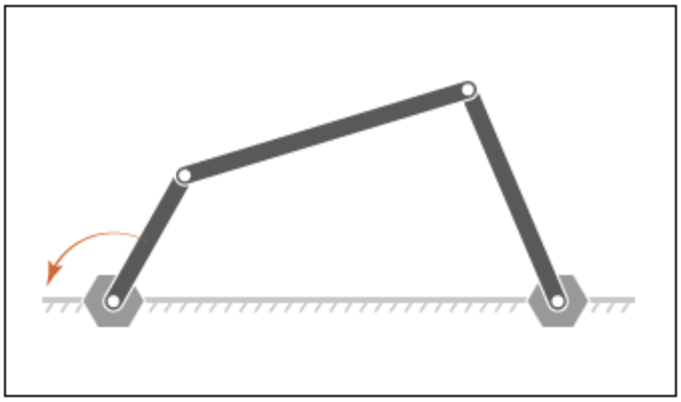

Build Model

1. At the MATLAB® command prompt, enter `smdoc_four_bar`. A four-bar model opens. This is the model you create in tutorial Model Four Bar.
2. In the dialog box of the Base-Crank Revolute Joint block, specify the following parameters settings.

Parameter	Setting
Actuation > **Torque**	Automatically Computed
Actuation > **Motion**	Provided by Input
Sensing > **Actuator Torque**	Selected

3. The joint block displays two physical signal ports. Input port q accepts the joint angular position. Output port t provides the joint actuation torque required to achieve that angular position.
4. In each of the four Revolute Joint block dialog boxes, set **Internal Mechanics** > **Damping Coefficient** to 5e-4 N*m/(deg/s). During simulation, damping forces between the joint frames account for dissipative losses at the joints.
5. Drag the following blocks into the model. These blocks enable you to specify an actuation torque signal and plot the joint position.

Block	Library
Simulink-PS Converter	**Simscape** > **Utilities**
PS-Simulink Converter	**Simscape** > **Utilities**
Scope	**Simulink** > **Sinks**
Signal Builder	**Simulink** > **Sources**

6. Connect the blocks as shown in the figure.

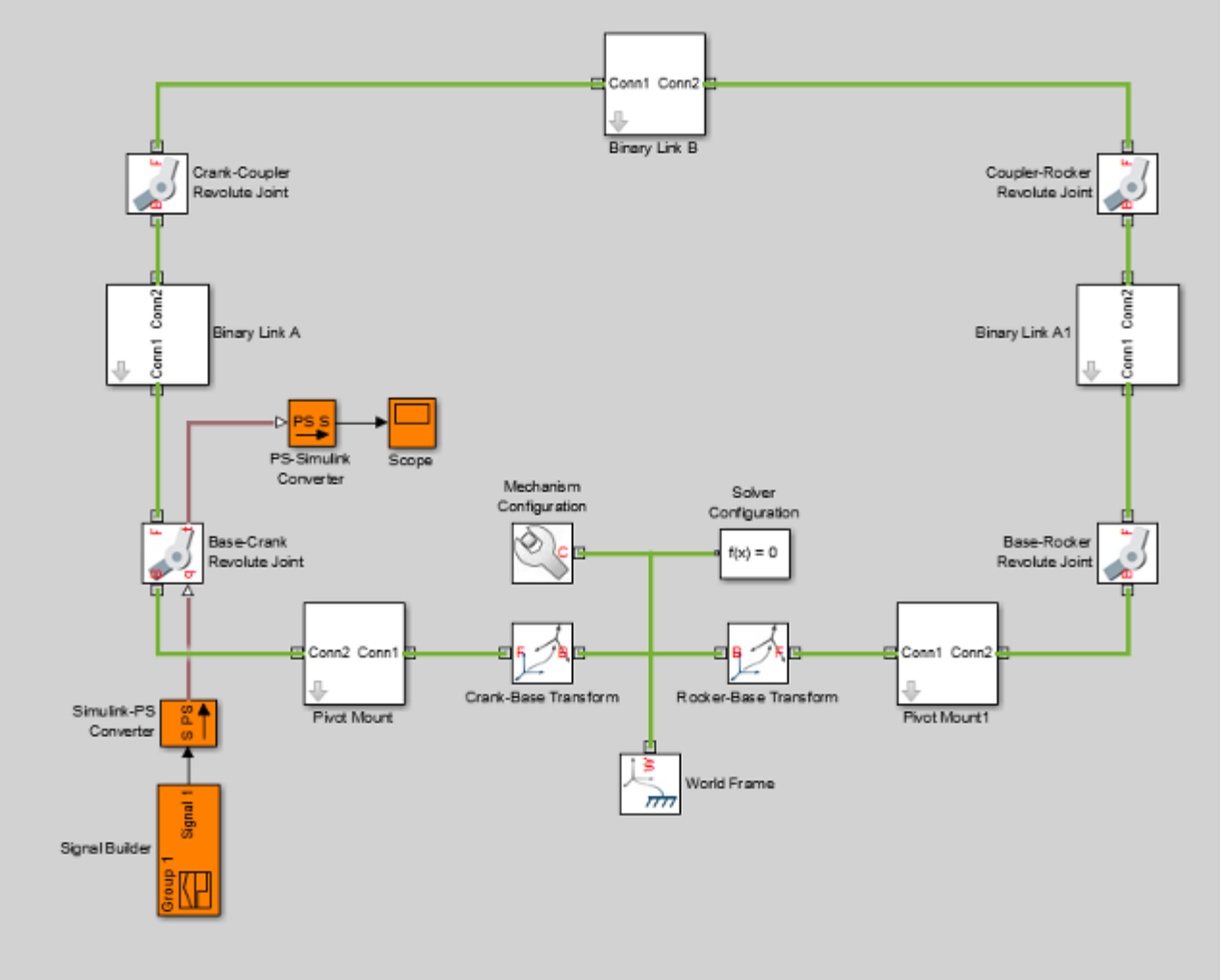

7. In the Input Handling tab of the Simulink-PS Converter block dialog box, specify the following block parameters.

Parameter	Value
Filtering and derivatives	Filter input
Input filtering order	Second-order filtering

8. In the Signal Builder window, specify the joint angular trajectory as shown in the figure.

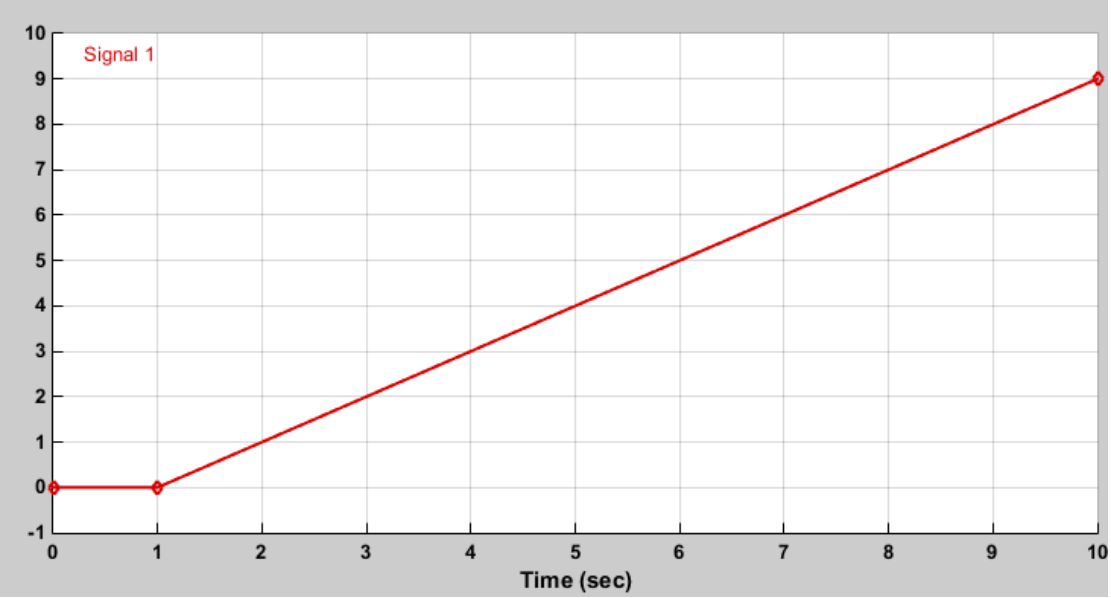

This signal corresponds to a constant angular speed of 1 rad/s from t = 1s onwards.

Simulate Model

Run the simulation, e.g., by selecting **Simulation** > **Run** from the Simulink® menu bar. Mechanics Explorer opens with a dynamic display of the four-bar model.

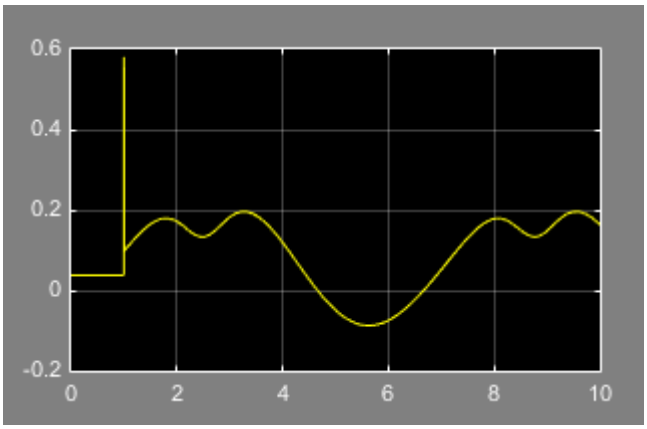

Open the Scope window. The scope plot shows the joint actuation torque with which you can achieve the motion you prescribed.

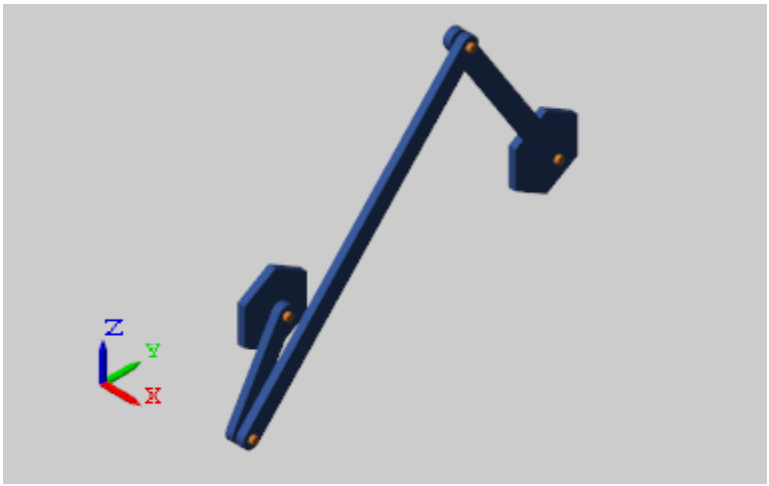

Perform Analysis

Question

In the position shown below, crank AB has a constant angular velocity of 6.3 rad/s counterclockwise. Determine the angular velocities and angular accelerations of the connecting rod BD and the rocker DE.

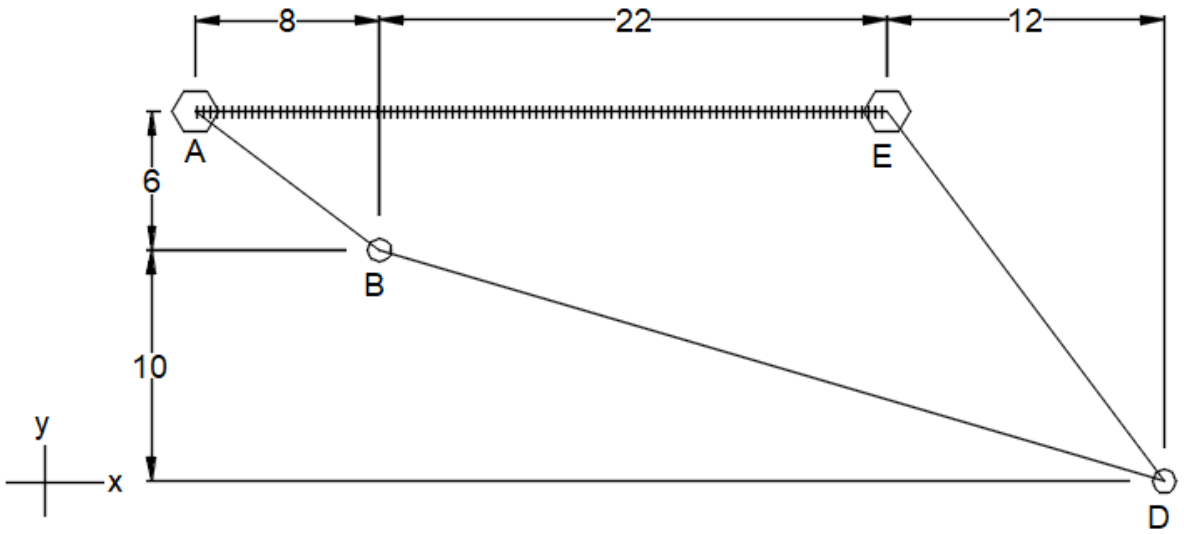

You will modify the Four Bar Mechanism Simulink model to obtain the angular velocities and accelerations and compare the values to the calculated results.

Modify Model

1. At the MATLAB command prompt, enter smdoc_four_bar. A four-bar model opens.
2. Calculate the lengths of crank AB, connecting rod BD and rocker DE in the figure above and specify them as the length parameter in the dialog box of each binary link block.

Block	**Library**
Binary Link A	Crank rod AB
Binary Link B	Connecting rod BD
Binary Link A1	Rocker rod DE

3. Drag the following blocks into the model.

Block	**Library**
Simulink-PS Converter	**Simscape > Utilities**
PS-Simulink Converter	**Simscape > Utilities**
To Workspace	**Simulink > Sinks**
Ramp	**Simulink > Sources**

- Modify the blocks as shown below.

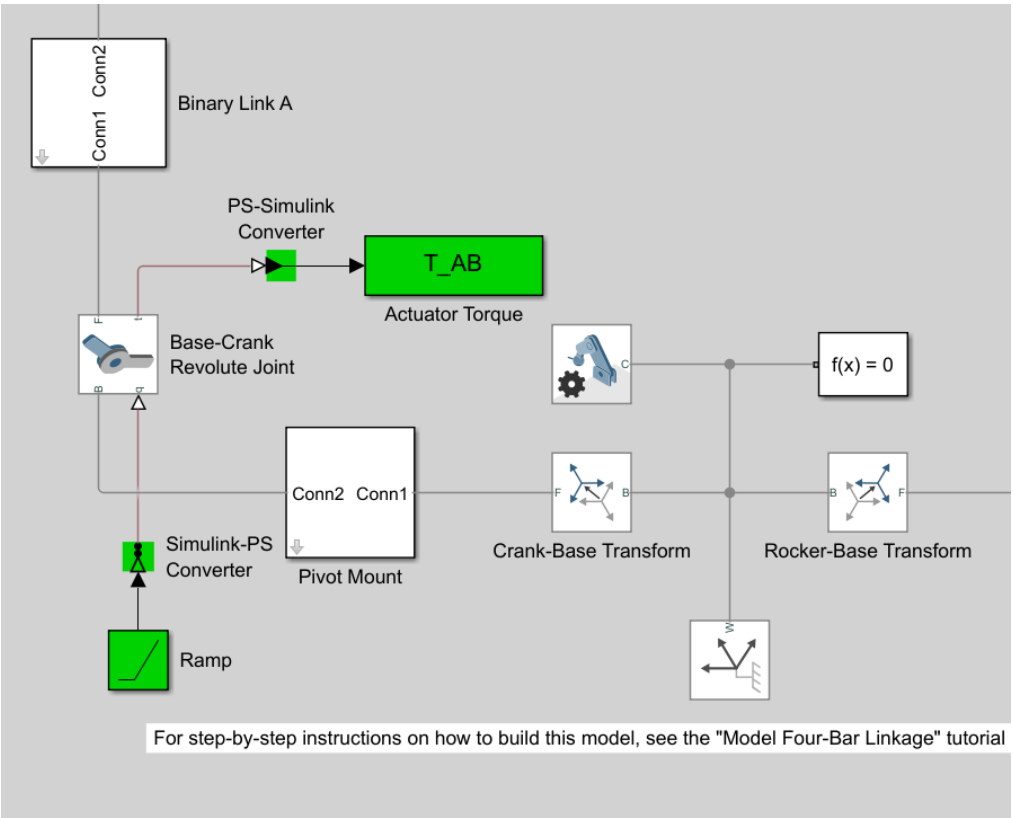

- In the dialog box of the **Base-Crank Revolute Joint block**, specify the following parameters settings.

Parameter	**Setting**
Actuation > Torque	Automatically Computed
Actuation > Torque	Provided by Input
Sensing > Actuation Torque	Selected

- In the dialog box of **Actuator Torque**, give variable name as **T_AB**.
- Set the **slope** in the ramp block dialog box to **6.3** rad/s.
- In the Input Handling tab of the Simulink-PS Converter block dialog box, specify the following block parameters.

Parameter	**Value**
Filtering and derivatives	Filter input
Input filtering order	Second-order filtering

4. Vector norm block computes the magnitude of a vector. To design the vector norm block:
   - Drag the following blocks into the model.

Library	**Block**	**Quantity**
Simulink > Quick Insert > Math Operations	Square	3

Simulink > Math Operations	Sqrt	1
Simulink > Math Operations	Sum	1

- In the **Sum** dialog box, add 3 plus (**+**) sign.

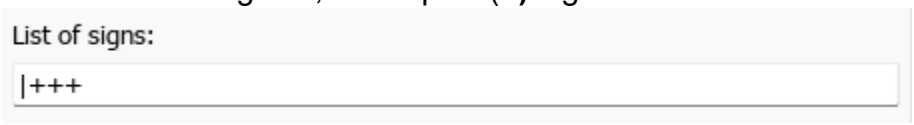

- Connect the blocks as shown below.

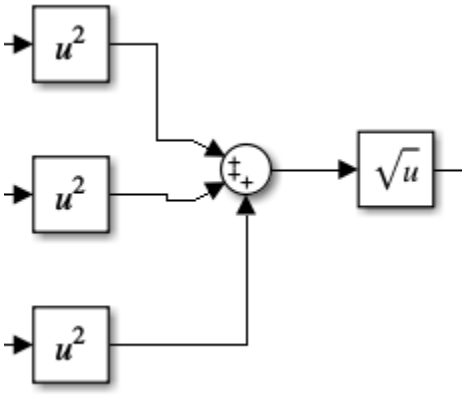

- Select the blocks, go to **Multiple** in the menu bar and click on **Create Subsystem**.

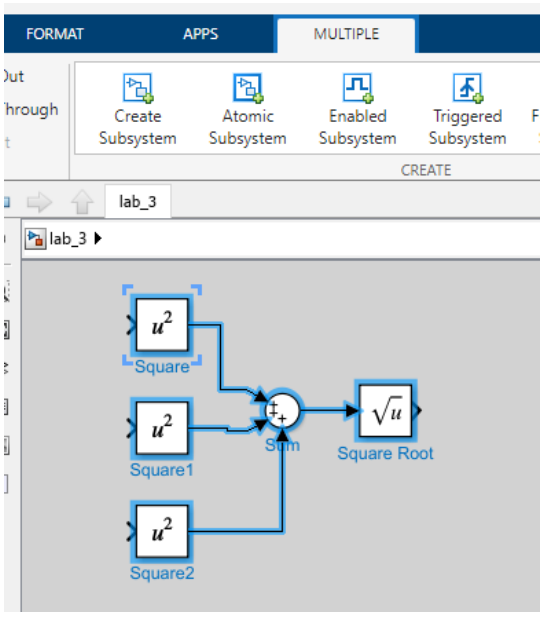

- Name the block as **Vector norm**.

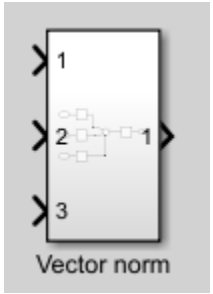

- Right-click on the block, select **copy** and make **6** copies of it.

5. Drag these blocks to the model.

Library	Block	Quantity
Simscape > Multibody > Frames and Transforms	Transform Sensor	3
Simulink > Math Operations	Gain	3
Simulink > Sinks	To Workspace	9
Simscape > Utilities	PS-Simulink Converter	21

6. In each of the three dialog boxes of the **Transform Sensor block**, select the following parameters settings.

Parameter	Setting
Rotation	Angle
Angular Velocity	Omega X, Omega Y, Omega Z
Angular Acceleration	Alpha X, Alpha Y, Alpha Z

7. In each of the three **Gain** dialog boxes, set gain to **180/pi**.
8. Name the **To Workspace blocks** according to these naming patterns as shown in the **Four-Bar Linkage** figure.

Name	Description
AB_rot_position	The angular position of B with respect to A.
AB_ang_vel	The angular velocity of crank AB.
AB_ang_acc	The angular acceleration of crank AB.
BD_rot_position	The angular position of D with respect to B.
BD_ang_vel	The angular velocity of rod BD.
BD_ang_acc	The angular acceleration of rod BD.
DE_rot_position	The angular position of D with respect to E.
DE_ang_vel	The angular velocity of rocker rod DE.
DE_ang_acc	The angular acceleration of rocker rod DE.

9. Run the simulation by selecting **Simulation > Run** from the Simulink menu bar.

NOTE: The **To Workspace** blocks can be exchanged with the **Scope** block (**Simulink > Sinks**) to observe the profile graphs of velocity, acceleration, and torque.

Four-Bar Linkage

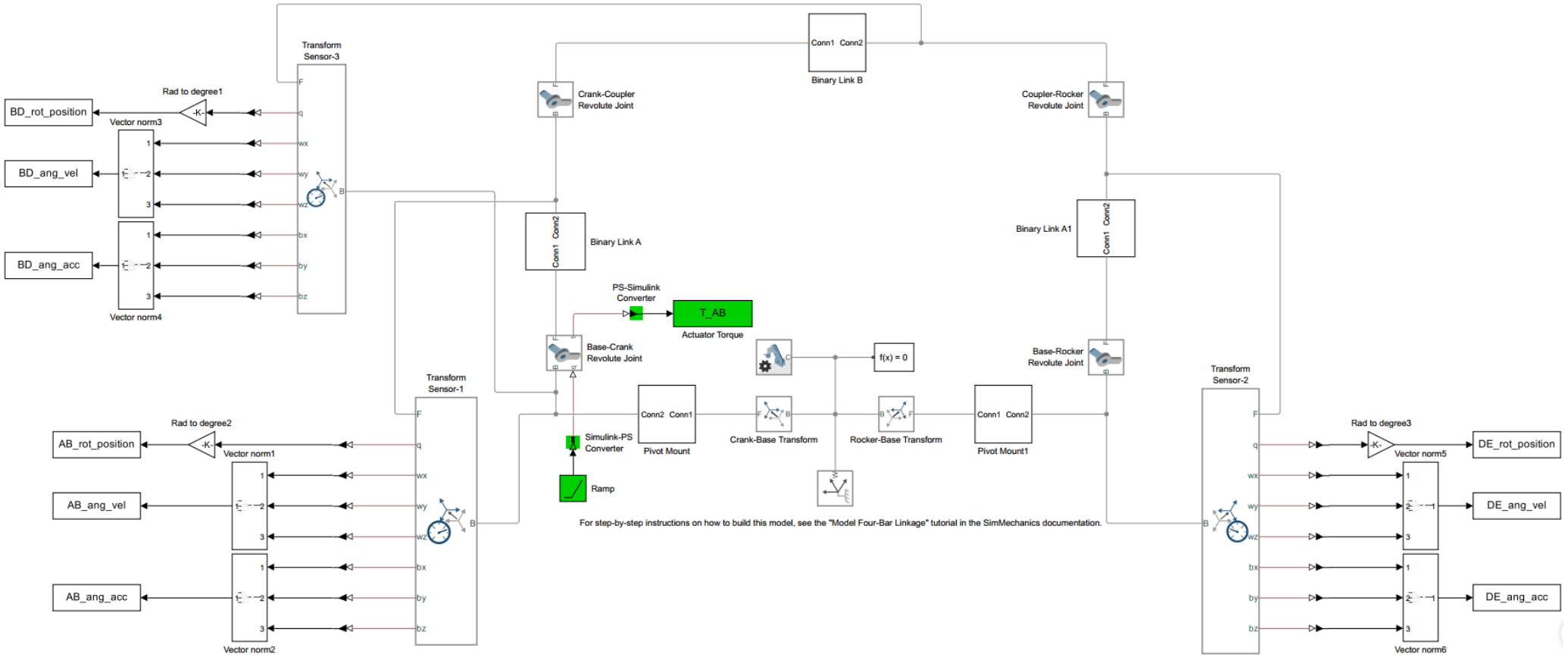

Analysis and Results

1. After running the modified Simulink model, go to MATLAB and run these lines of code.

```
AB_rot_position_new = ts2timetable(AB_rot_position);
AB_ang_vel_new = ts2timetable(AB_ang_vel);
AB_ang_acc_new = ts2timetable(AB_ang_acc);


BD_rot_position_new = ts2timetable(BD_rot_position);
BD_ang_vel_new = ts2timetable(BD_ang_vel);
BD_ang_acc_new = ts2timetable(BD_ang_acc);


DE_rot_position_new = ts2timetable(DE_rot_position);
DE_ang_vel_new = ts2timetable(DE_ang_vel);
DE_ang_acc_new = ts2timetable(DE_ang_acc);




T_AB_new = ts2timetable(T_AB);
```

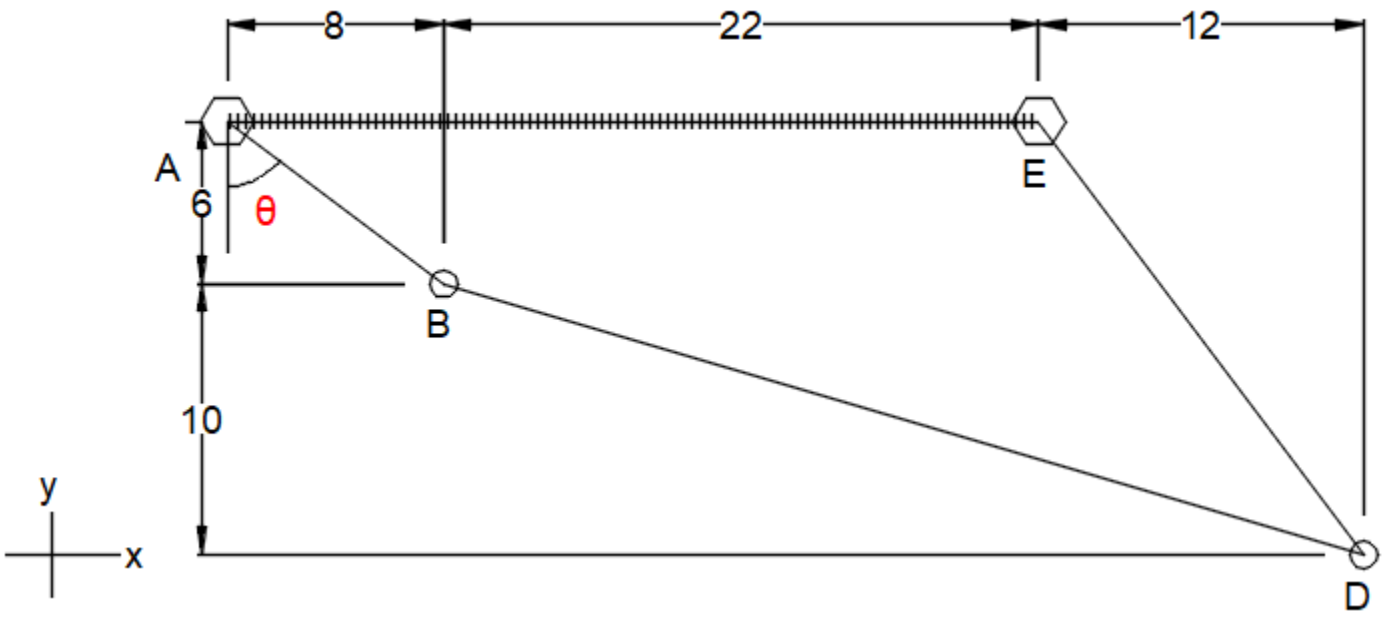

2. Find θ in the figure above.
3. Open **AB_rot_position_new** from the MATLAB workspace and locate a Data value so close to the calculated θ. Note the **index number**. An example is shown below.

AB_rot_position_new

3024x1 timetable

	Time	1 Data
7	0.0022865 sec	0.2606
8	0.0031152 sec	0.4845
9	0.0041499 sec	0.8110
10	0.0055056 sec	1.2764
11	0.0076798 sec	2.0519
12	0.0099571 sec	2.8724
13	0.013217 sec	4.0489
14	0.016477 sec	5.2254

4. With the **index number**, obtain the angular velocity and acceleration data values of rod BD, and angular velocity and acceleration data values of rocker DE from these data files respectively*: **BD_ang_vel_new, BD_ang_acc_new, DE_ang_vel_new, DE_ang_acc_new***. Also obtain the torque value that was applied at the Base-Crank joint from the data file ***T_AB_new***.
5. Record your results in the table below.

	Analytical results		**Simulation results**	
	Angular velocity	**Angular acceleration**	**Angular velocity**	**Angular acceleration**
Connecting rod BD				
Rocker DE				

DISCUSSION

Comment on your results (velocities, accelerations, and torque).

LAB PROJECT # 4:

Coefficient of Restitution

OBJECTIVES

In this lab you will

- Determine the coefficient of restitutions on three different surface with three different type of balls.
- Plot standard deviation graph of coefficient of restitutions for the three different surfaces.
- Generate 3D surface plot graph.

EQUIPMENT

- Measuring tape
- Three balls (e.g. golf, cricket, table tennis ball, tennis ball, basketball, football, etc.)
- Surfaces floor of interest (wood, grass, carpet, etc.)

THEORY

The coefficient of restitution (COR) is a measure of the "restitution" of a collision between two objects: how much of the kinetic energy remains for the objects to rebound from one another vs. how much is lost as heat, or work done deforming the objects. The COR, is defined as the ratio of relative speeds after and before an impact, taken along the line of the impact:

$$Coefficient\ of\ Restitution\ (e) = \frac{Relative\ velocity\ after\ collision}{Relative\ velocity\ before\ collision}$$

The line along which 'e' is defined or in absence of tangential reaction force between colliding surfaces force of impact is shared along this line between bodies. During physical contact between bodies during impact its line along common normal to pair of surfaces in contact of colliding bodies. e is usually a positive, real number between 0 and 1. e = 0: This is a perfectly 'inelastic' collision. The objects do not move apart after the collision, but instead they coalesce. Kinetic energy is converted to heat or work done in deforming the objects. 0 < e < 1: This is a real-world 'inelastic' collision, in which some kinetic energy is dissipated. e = 1: This is a perfectly 'elastic' collision, in which no kinetic energy is dissipated, and the objects rebound from one another with the same relative speed with which they approached.

In a one-dimensional collision, the two key principles are: conservation of energy (conservation of kinetic energy if the collision is perfectly elastic) and conservation of (linear) momentum. The advantage of using the restitution equation is that it sometimes provides a more convenient way to approach the problem.

In the case of a one-dimensional collision involving two objects, object A and object B, the coefficient of restitution is given by:

$$C_R = \frac{v_b - v_a}{u_a - u_b}\ , where:$$

v_a is the final velocity of object A after impact, v_b is the final velocity of object B after impact, u_a is the initial velocity of object A before impact, while u_b is the initial velocity of object B before impact.

For an object bouncing off a stationary target, CR is defined as the ratio of the object's speed after the impact to that of prior to impact:

$$e = \frac{v_2}{v_1} \qquad (1)$$

Where: v_2 is the speed of the object after impact, and v_1 is the speed of the object before impact.

Thus, if the ball drops vertically with speed of v_1 impacting to a resting planar surface in normal impact configuration, it rebounds with speed of v_2. Using the energy principles (conservation of energy), the inbound and rebound speed relates to the drop height and can be defined as follows:

$$v_1 = (2gh_1)^{1/2}$$
$$v_2 = (2gh_2)^{1/2} \qquad (2)$$

Using the Equations above, the COR can be related to heights as:

$$e = \frac{v_2}{v_1} = \left(\frac{h_2}{h_1}\right)^{\frac{1}{2}} \qquad (3)$$

PROCEDURE

Keep in mind that blow steps are given in order to give you some guidance.

- For the experiment, you should get three sports balls and meter rule / measuring tape.
- Choose three different floors of interest and perform the experiment on them.

For the first chosen floor:

1. With the help of your meter rule (measuring tape) measure and place the ball at some certain drop height (h_1) above the floor as can be seen from figure 1.
2. Release the ball to strike the ground and bounces back to a maximum height (h_2).
3. Record how high it bounces to the maximum height (h_2).
4. Your smart phone can be used to measure the h_2 reached, by recording the ***slow-motion video*** or using any appropriate means of interest.
5. Repeat (1-4) for at least three times, then the average value of h_2 could be use in this case.
6. With the use of conservation of energy equation, the velocity before (v_1) and after (v_2) collision of the ball can be obtained or calculated using equation (2).
7. Use equation (3) to find the coefficient of restitution.
8. Repeat above-mentioned steps (1-5) for the **other two different ball types.**

For the second and third chosen floor:

- Repeat 1-8.

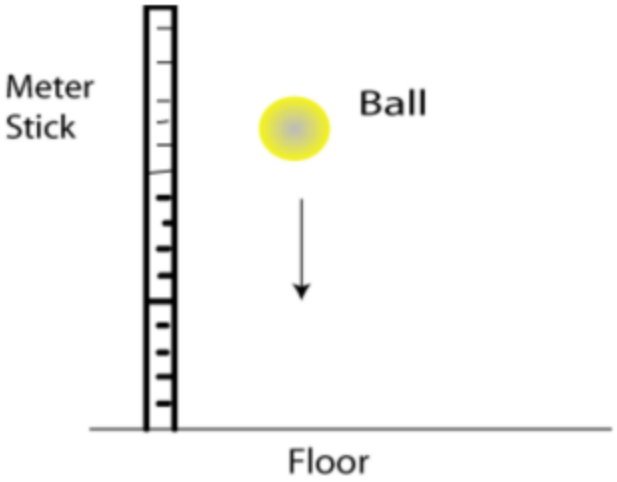

Figure 1: Experimental set-up

RESULTS, CALCULATIONS AND ANALYSIS

With the use of equation (2) the velocities of the balls could be calculated and tabulated in tables 1, 2, and 3.

Table 5: First surface floor (.....)

Ball type	***Drop height (h_1)***	***V_1 (m/s)***	***Max height reached (h_2)***	***V_2 (m/s)***
1. ….				
2. ….				
3. ….				

Table 6: Second surface floor (.....)

Ball type	***Drop height (h_1)***	***V_1 (m/s)***	***Max height reached (h_2)***	***V_2 (m/s)***
1. ….				
2. ….				
3. ….				

Table 7: Third surface floor (……..)

Ball type	***Drop height (h_1)***	***V_1 (m/s)***	***Max height reached (h_2)***	***V_2 (m/s)***
1. ….				
2. ….				
3. ….				

Use equation (3) to calculate the COR (e) and tabulate the results in table 4.

Table 8: COR (e) table

Ball type	***First surface floor***	***Second surface floor***	***Third surface floor***
1. ….			
2. ….			
3. ….			

GRAPHS

Use MATLAB to illustrate your work graphically:

a) use *e* values from table 4 to plot the **standard deviation** graph of *e*'s for the 3 different surfaces

b) from table 4 use *e* values, ball types, and surface floors and generate their "**3D surface plot"** graph

DISCUSSION & CONCLUSION

State your observation during the experimental study. What conclusions can you draw from the experimental study? What are your observations as the surface changes or the ball type? What are the sources of your error? Based on the "GRAPHS" obtained what observations could you draw?

NOTE:

- Prepare your own report (project).
- Your report must include:
  - table of content,
  - list of figures & tables,
  - aim/objective, introduction, equipment
    - State all the equipment used, and in your report experimental procedure pictures should be added (such as pics of the ball types, floors, etc.).
  - **PROCEDURE**
  - **RESULTS, CALCULATIONS & ANALYSIS,**
  - **GRAPHS, DISCUSSION & CONLUSION.**
- Any three different surfaces or ball types of interest could be used, but must be stated.
- Read carefully, understand and follow the template. All the required and necessary information are given.