POWER GENERATION TRASNMISON AND DISTRIBUTION

Gizem Aytac

HOW TO FLOW ELECTRICICTY

Electricity is define as the flow of the electric charge. Charge is a property of matter, which has mass and volume or density. Charge has two types ; positive (+) and negative charge (-)

In order to move charge we need to carries and the carries will define as a atomic particles. When examine the atmomic particle, Electrons always carry a negative charge (-), while protons are always positively charged (+) and neutrons are neutral (0) they have no charge. Both electrons and protons carry the same **amount** of charge, just a different type.

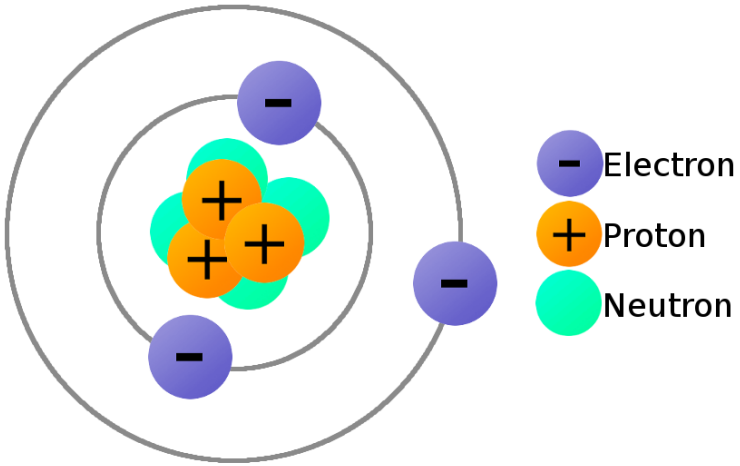

Electrons only charges that can move from the one atom to other atom. Other charges are steady they can not move. From that point, electrons in atoms can act as our charge carrier. If we can free an electron from an atom and force it to move, we can create electricity.

HOW TO FLOW ELECTRICITY

The atomic model of a copper atom, one of the preferred elemental sources for charge flow. Copper atom has 1 electron on the last orbit and this electron can easily share with the other atoms and this flow create electricity.

Consider a copper wire: matter filled with countless copper atoms. As our **free electron** is floating in a space between atoms, it's pulled and prodded by surrounding charges in that space. After that, the free electron eventually finds a new atom to bond on to the orbit, negative charge of that electron ejects another electron from the atom. Now a new electron is drifting through free space looking to do the same thing. This chain effect can continue on and on to create a flow of electrons called **electric current**.

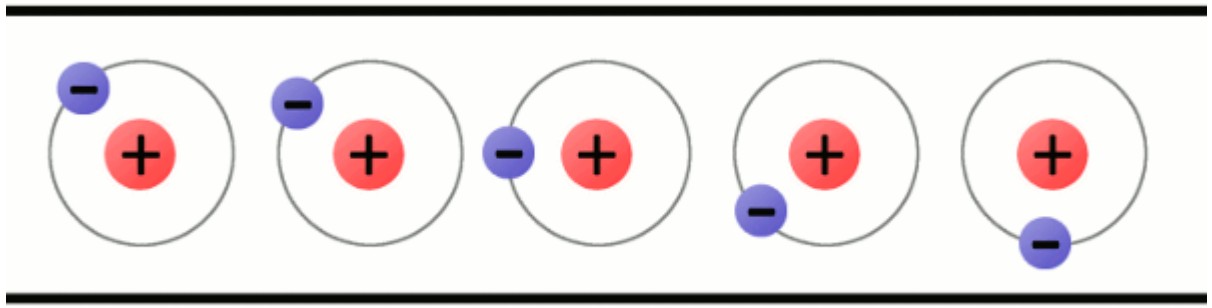

ELECTRİC CİRCUİTS CURRENT FLOW

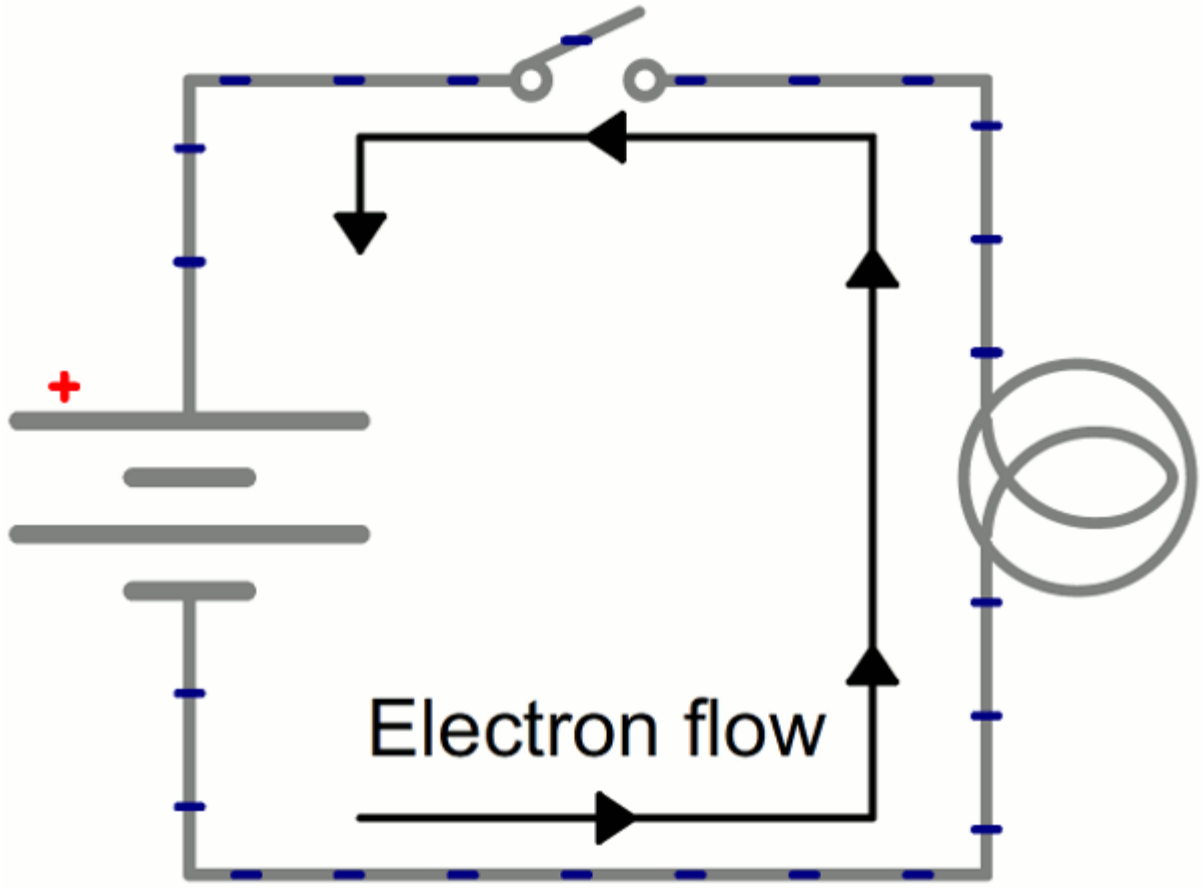

There are lots of types for to generate electricity. For instance, renewable energy resources nuclear sources or other conventional sources. The aim of the all resources is mainly turn generators or helps to electron to shear off from the atoms or helps to movement of electron to other atoms and create electricity.

Electricity generation by using Renewable Energy resources

Electricity generation by using conventional resources (ex: coal or gas)

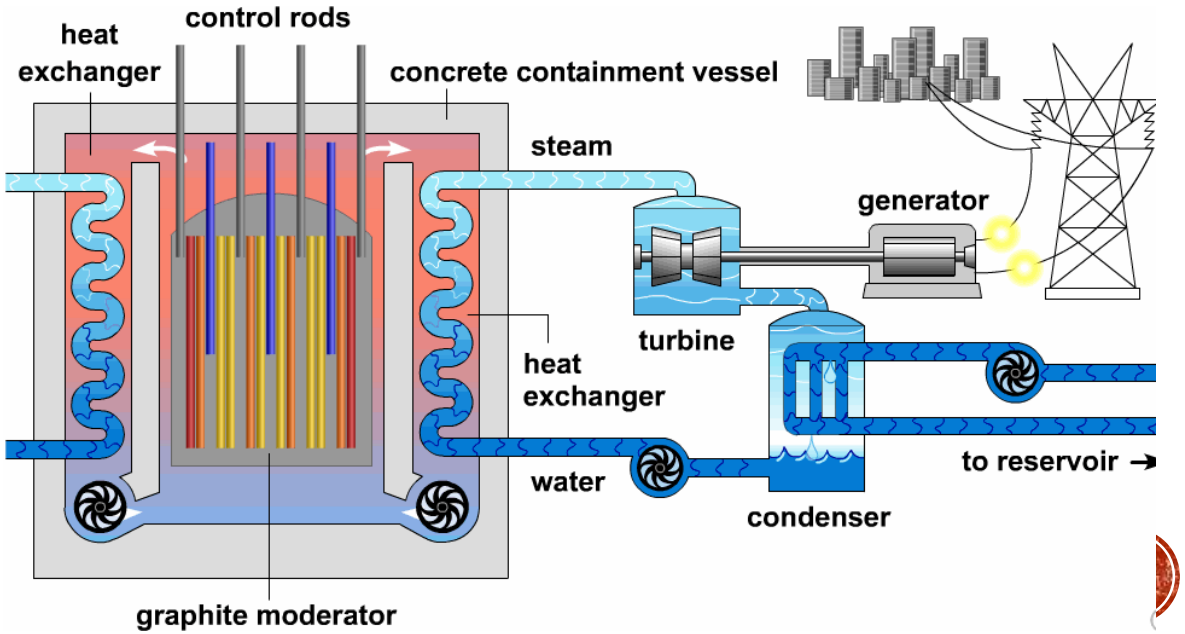

THERMAL POWER PLANTS

A fossil fuel power station is a thermal power station which burns a fossil fuel such as coal, natural gas, or petroleum to produce electricity. Central station fossil fuel power plants are designed on a large scale for continuous operation. In many countries, such plants provide most of the electrical energy used.

Fossil fuel power stations have machinery to convert the heat energy of combustion into mechanical energy, which then operates an electrical generator.

POWER GENERATION FROM THERMAL POWER PLANT

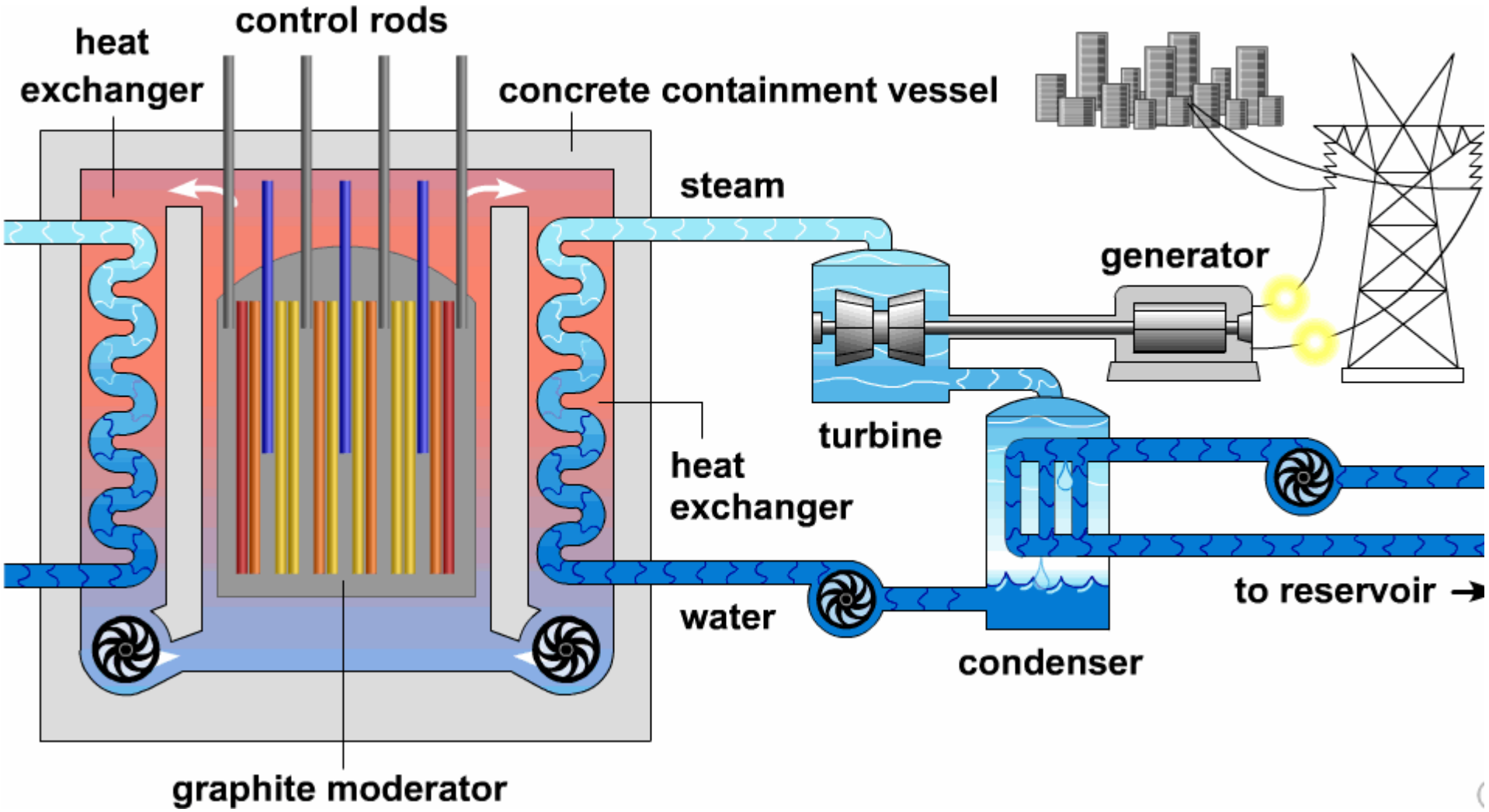

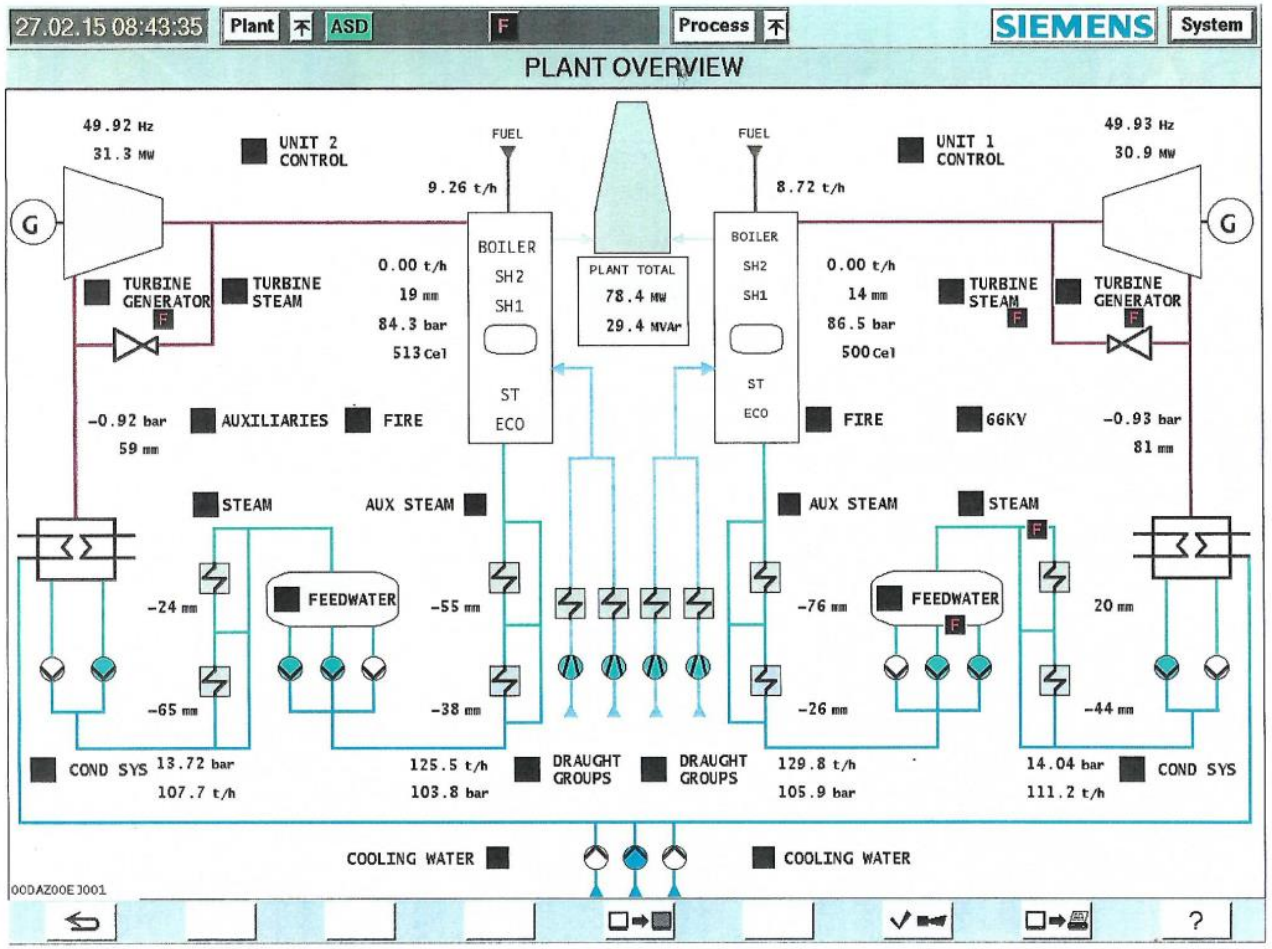

In a steam turbine power plant, fuel is burned in a furnace and the hot gasses flow through a boiler. Water is converted to steam in the boiler; additional heating stages may be included to superheat the steam. The hot steam is sent through controlling valves to a turbine. As the steam expands and cools, its energy is transferred to the turbine blades which turn a generator. The spent steam has very low pressure and energy content; this water vapor is fed through a condenser, which removes heat from the steam . The condensed water is then pumped into the boiler to repeat the cycle.

BOİLER

- Heating the water from cold condition to boiling point or saturation temperature.
- Water boils at saturation temperature to produce steam.
- Heating steam from saturation temperature to higher temperature called Superheating to increase the temperature and pressure of the water vapor of power plant output and this process helps to increase the efficiency of the power plant.

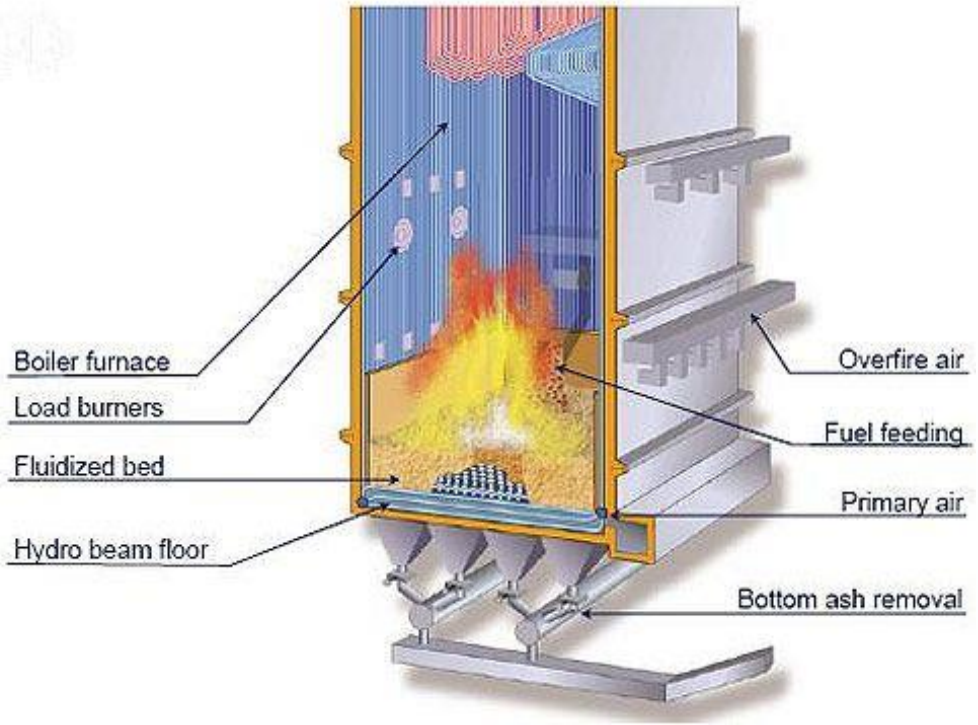

CONDENSER AND HEAT EXCHANGER

- A surface condenser is a commonly used term for a water-cooled shell and tube heat exchanger installed on the exhaust steam from a steam turbine in thermal power stations.

- These condensers are heat exchangers which convert steam from its gaseous to its liquid state at a pressure below atmospheric pressure. Where cooling water is in short supply, an air-cooled condenser is often used.

- Surface condensers are also used in applications and industries other than the condensing of steam turbine exhaust in power plants.

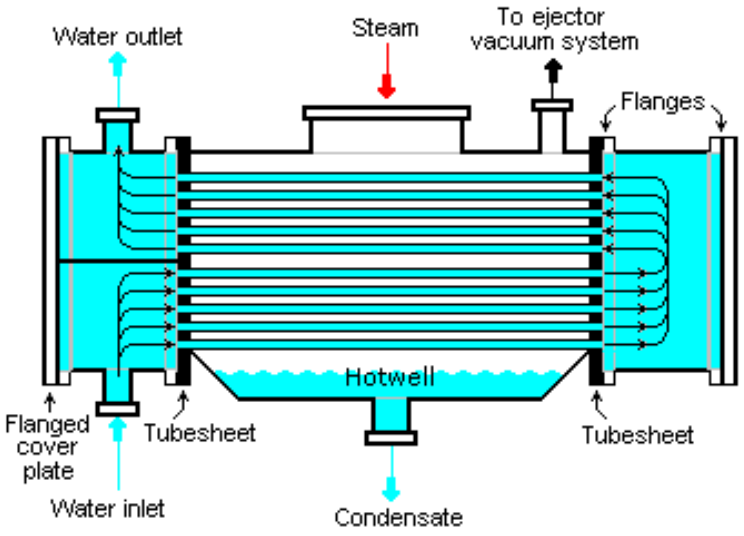

STEAM TURBİNE

Steam turbines use high-pressure steam to turn electricity generators at incredibly high speeds, so they rotate much faster than either wind or water turbines. For example, a typical power plant steam turbine rotates at 1800–3600 repetitions per minute (RPM); about 100–200 times faster than the blades spin on a typical wind turbine, which needs to use a gearbox to drive a generator quickly enough to make electricity.

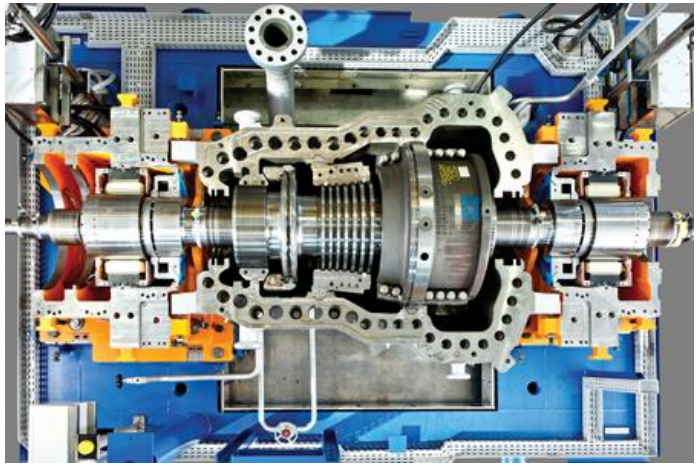

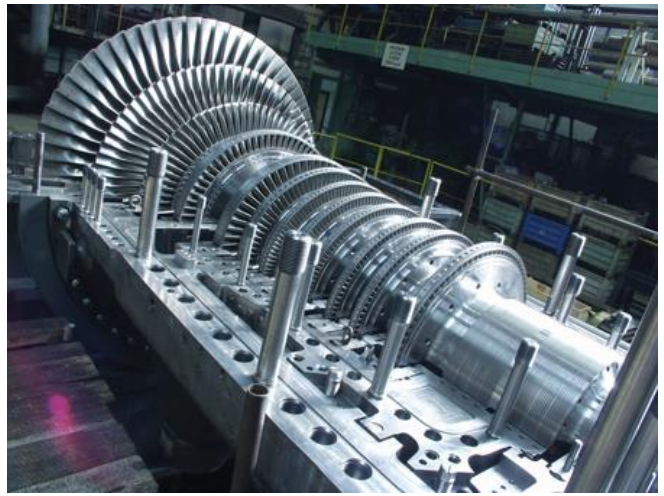

SYNCHRONOUS GENERATOR

The synchronous generator or alternator is an electrical machine which converts the mechanical power from a prime mover into an AC electrical power at a particular voltage and frequency. The synchronous motor always runs at the constant speed called synchronous speed.

The rotor and stator are the rotating and the stationary part of the synchronous generator. They are the power generating components of the synchronous generator. The rotor has the field pole, and the stator consists the armature conductor. The relative motion between the rotor and the stator induces the voltage between the conductor.

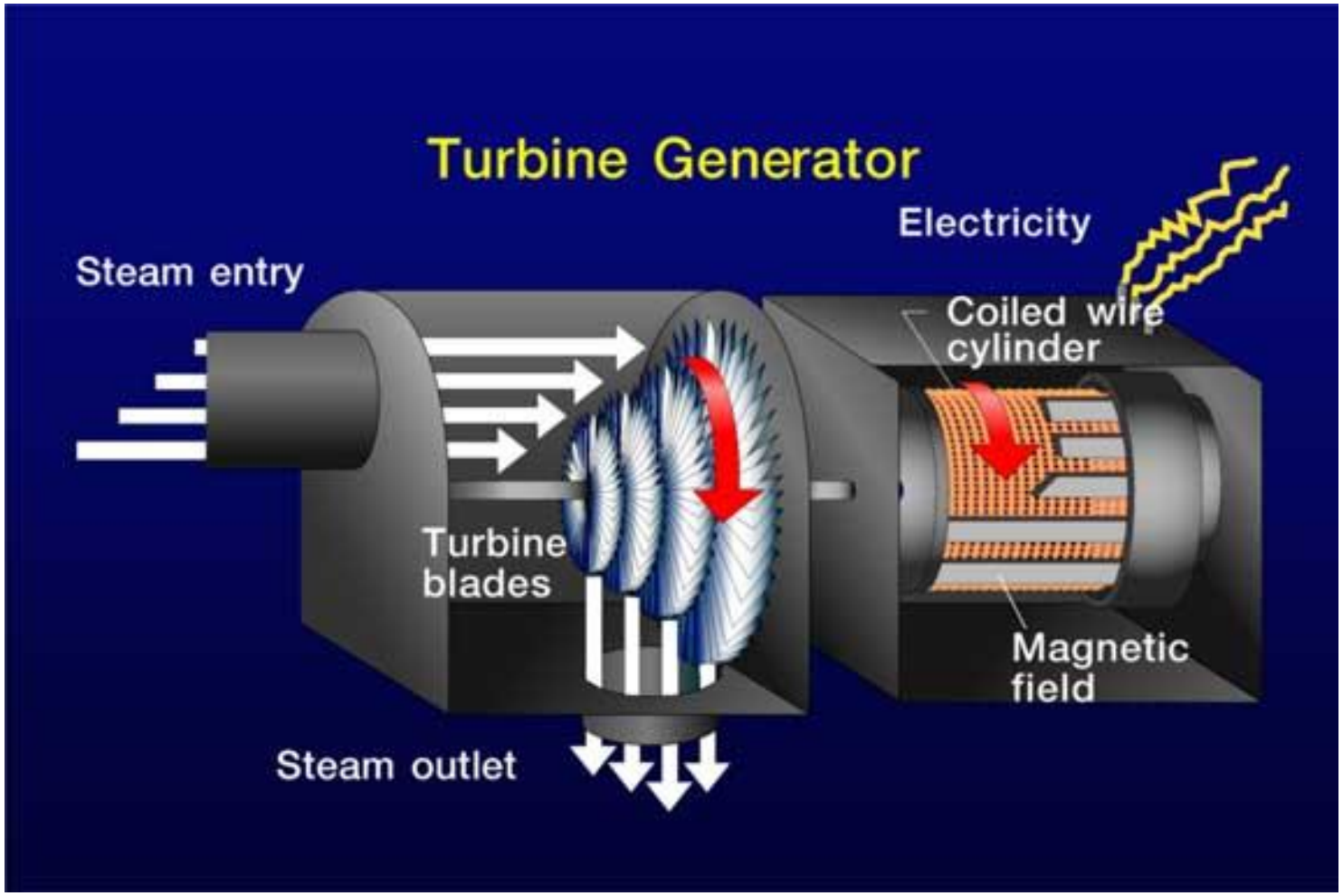
Turbine Generator
Electricity
Steam entry
Coiled wire cylinder
Turbine blades
Magnetic field
Steam outlet

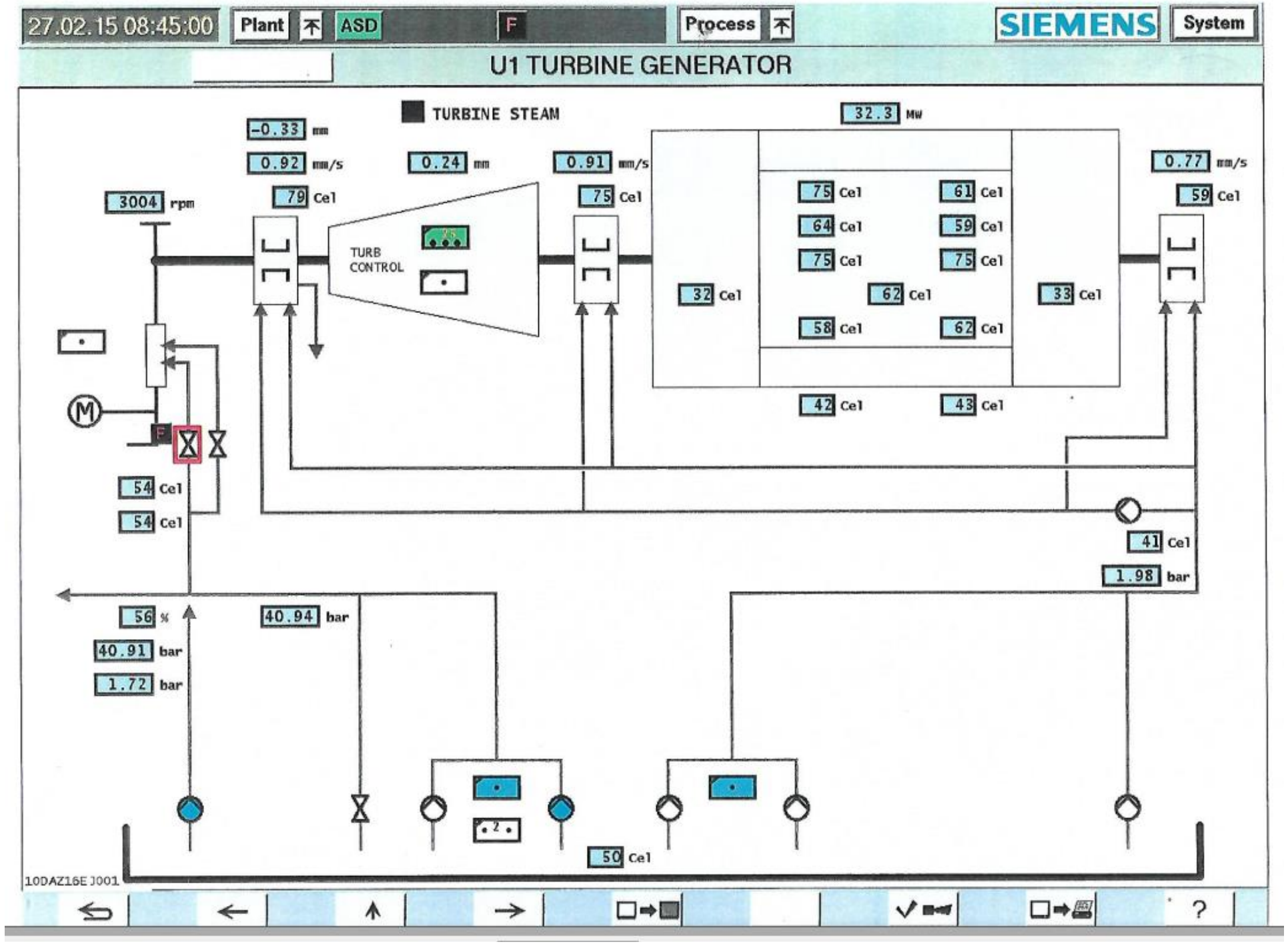
27.02.15 08:45:00
Plant
ASD
F
Process
SIEMENS
System
U1 TURBINE GENERATOR
TURBINE STEAM
-0.33 mm
0.92 mm/s
79 Cel
0.24 mm
0.91 mm/s
75 Cel
32.3 MW
0.77 mm/s
59 Cel
3004 rpm
TURB CONTROL
75 Cel
61 Cel
64 Cel
59 Cel
75 Cel
75 Cel
62 Cel
58 Cel
62 Cel
32 Cel
33 Cel
42 Cel
43 Cel
54 Cel
54 Cel
41 Cel
1.98 bar
56 %
40.94 bar
40.91 bar
1.72 bar
50 Cel
10DAZ16E J001

GENERATION TRANMISION DISTRIBUTION

After the generation electricity , should tranmits the consumers. During this proces, substations ,tranmision lines and transformers are the major part of the power systems.

- Generators are using mechanical energy to convert electricity.
- Transformers are using step up or step down the voltage level of the electric for to help the tranform the elecricity.
- Transmision lines carry the electricity.
- Substations are decrease the volatage level for to provide electricity to the customers or increase the voltage level for the good transmision of electricity.

TRANSFORMER

Transformer is the machine that the able to increase the voltage level or decrease the voltage level for to distribute the electricity.

There are three types of transformers;

- Step up transformers which are increase the voltage level
- Step down trasnformers which are decrease the transformers
- Autotransformers which are able to do both (increase or decrease) the voltage level.

In the power plants all generators are connected to the step up transformers. Because to increae the voltage level for to transmit long distance.

TRANSMISION OF ELECTRICITY

Electric power transmission is the bulk movement of electrical energy from a generating site, such as a power plant, to an electrical substation. The interconnected lines which facilitate this movement are known as a transmission network. This is distinct from the local wiring between high-voltage substations and customers, which is typically referred to as electric power distribution. The combined transmission and distribution network is known as the "power grid".

SUBSTATIONS

The substation is a part of an electrical generation, transmission, and distribution system. Substations transform voltage from high to low, or the reverse, or perform any of several other important functions. Between the generating station and consumer, electric power may flow through several substations at different voltage levels. A substation may include transformers to change voltage levels between high transmission voltages and lower distribution voltages, or at the interconnection of two different transmission voltages.

ELECTRICAL MOTORS

The basic idea of an electric motor is really simple: you put electricity into it at one end and an axle (metal rod) rotates at the other end giving you the power to drive a machine of some kind.

There's a permanent magnet (or magnets) around the edge of the motor case that remains static, so it's called the **stator** of a motor. Inside the stator, there's the coil, mounted on an axle that spins around at high speed—and this is called the **rotor**. The rotor also includes the commutator.

By using electricity ,the current flow the wire and windings generate the magnetic field refer to Faraday' s Law. Also permanent magnets which located in to the motor has a magnetic field. This two field attract each other and helps to rotate rotor. When the rotor turns mechanical energy will obtain.

Motors convert to electrical energy to the mechanical energy.

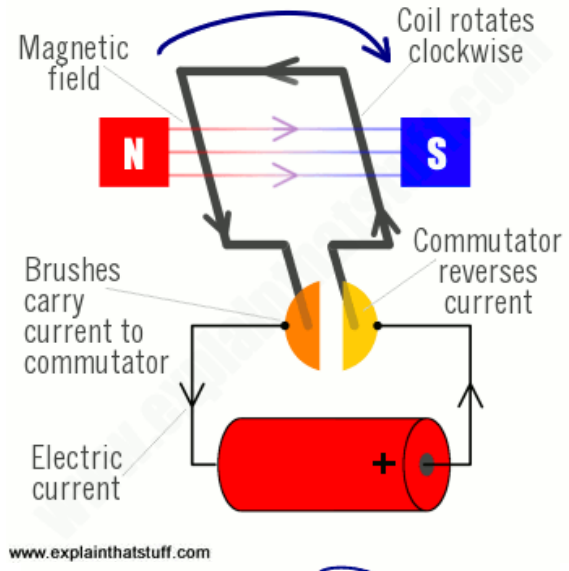

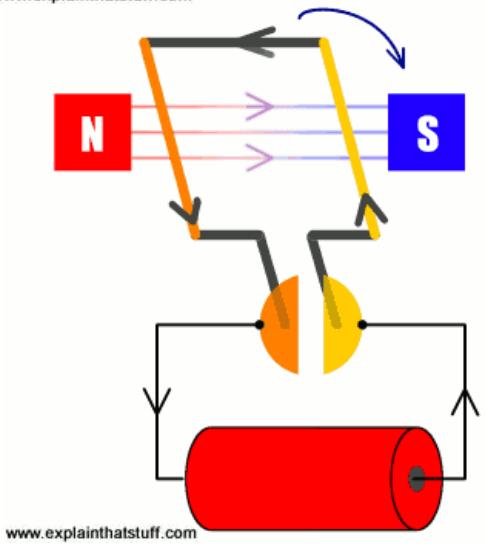
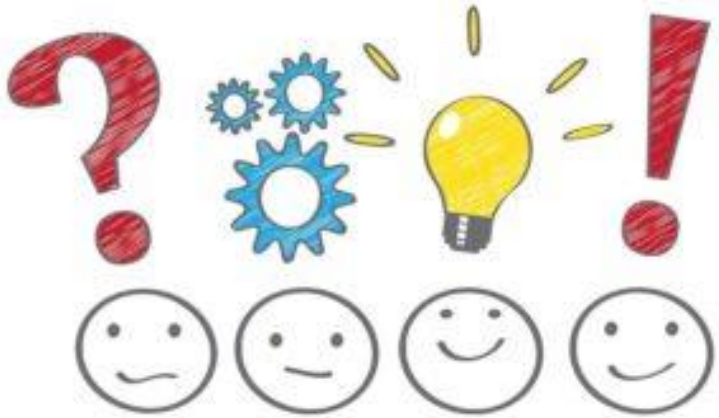
QUESTIONS ?